ARTICLE 3.
STRUCTURE SITING AND DEVELOPMENT STANDARDS

SECTION 3.0000. SITE ORIENTED IMPROVEMENTS

Section 3.0010. Calculating Average Grade and Building Height

The height of a structure is measured from the average grade of the undisturbed ground at the four principal corners of the proposed structure. To determine height:

A. Construction/building plans submitted for use permitted in any zone may be required to show the elevations of the undisturbed ground prior to construction as measured at the four principal corners of the proposed structure on a plot plan. A permanently accessible control point shall be established outside of the building's footprint (*Figure 1).*

B. Photographs of the undisturbed site may be required. Photographs need not be professional or aerial photographs.

C. To verify the height *(Figure 2)*, a survey by a registered surveyor may be required by the Community Development Director.

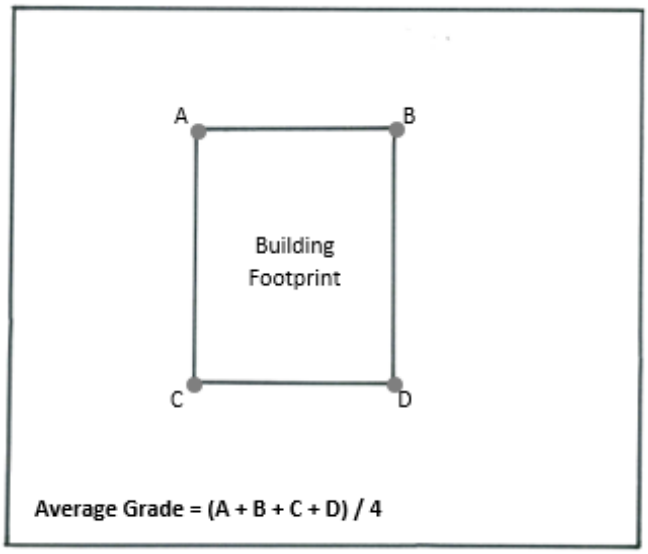

Figure 1: Calculating Average Grade

w

Figure 2: Measuring Building Height

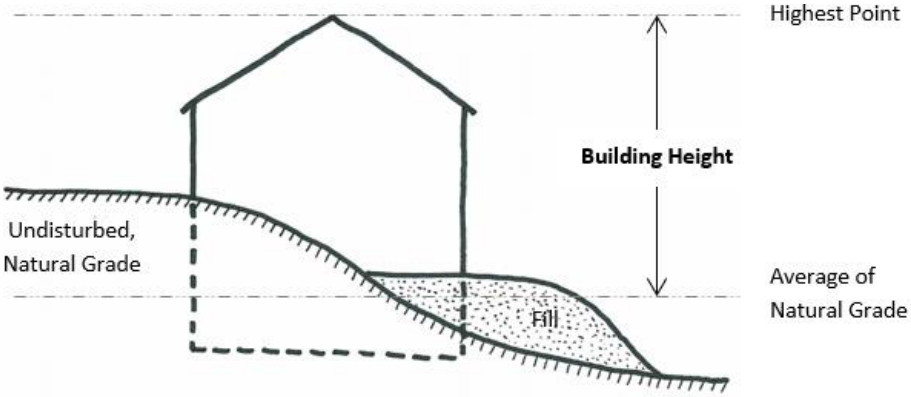

Section 3.0020. Grading of Building Site.

The grading of a building site shall conform to the standards contained in this Ordinance.

Section 3.0030. Special Site Development for Environmental Protection
Special requirements for environmental protection are specified in Article 6 of this document. In addition, in all areas of the County, sewage systems shall be allowed in those areas outside the Urban Growth Boundary only to alleviate a health hazard or water pollution problem which has been identified by the Department of Environmental Quality and will be used only as a last resort.

Section 3.0040. Water Improvement Standards
A year-round supply of at least 250 gallons of water per day by one of the following sources:

Source	Standard	Proof
Public or Community Water	Within Water Utility or area of service	Written correspondence from Water Utility stating water is available at the property line or conditions to the satisfaction of the Water Utility to make water available at the property line
Well	Existing well or easement provided no more than three (3) households use one well as a potable water source. Over three households must meet state potable requirements (ORS 448.115)	Well log data as to required quantity from certified well driller. Potability test from certified water lab.
Spring	Application from the State of Oregon Water Dept. for domestic water rights of at least .005 CFS (2.25 gals/min). Existing spring on property or easement to spring on adjacent property. Minimal development collection system and sediment box	Permit from the State of Oregon Water Resources Department for domestic water right. Certified to required quantity by Oregon Registered Engineer, Land Surveyor or qualified hydrologist. Potability test from certified water lab
River, stream, pond or hand dug well	Application from the State of Oregon Water Department for domestic water right of at least .005 CFS (2.25 gals/min)	Permit from the State of Oregon Water Resources Department for domestic water right. Potability test from certified water lab.

Source	Standard	Proof
Rainwater Catchment System	Oregon Building Codes	Design approved by Clatsop County Building Codes

Compliance with this standard does not insure a year-round source of potable water but establishes at a given time that the standard was met.

Section 3.0050. Off-Street Parking Required
Off-street parking and loading shall be provided for all development requiring a development permit according to Sections 3.0050 to 3.0120.

Section 3.0060. Minimum Off-Street Parking Space Requirements
Any uses described herein may provide up to 30% of the required number of parking spaces, except ADA-required spaces, as compact spaces, measuring no less than seven feet wide by eighteen feet long. Compact spaces shall be clearly marked accordingly. The minimum off-street parking space requirements are as follows:

1) **Residential type of development and number of parking spaces.**

Single family dwelling	(2) per dwelling unit
Accessory dwelling unit	(1) per dwelling unit
Multi-family dwelling	(3 per 2) dwelling units
Sorority, fraternity or dorm	(1 per 2) occupants
Residential hotel, rooming or boarding house or club	(2 per 3) guest rooms
Hotel or motel	(1.25) per guest room or suite plus 10 per ksf[1] restaurant/lounge, plus 30 per ksf meeting/banquet room (<50 ksf per guest room) or 20per ksf meeting/banquet room (>50 ksf per guest room).
Mobile home park	(1) per mobile home site, plus (1 per site) for guest parking at a convenient location
Planned development	In addition to the requirements for dwelling units, (1 per 2) units for guest parking at a convenient location

2) **Commercial type of development and number of parking spaces.**

[1] KSF: 1000 Square Feet

General retail or personal service	3.5 per ksf GFA[2]
Grocery, Discount Superstores/Clubs (freestanding)	6.0 per ksf GFA
Home Improvement Superstores	5.0 per ksf GFA
Other Heavy/Hard Goods (Furniture, appliances, Building Materials, Etc.)	3.0 per ksf GFA
Shopping Centers	4.0 per ksf GLA[3] up to 400 ksf; 4.0 to 4.5 per ksf GLA sliding scale between 400 and 600 ksf; 4.5 per ksf GLA over 600 ksf
Coin operated Laundries	1 per 2 washing and drying machines
Auto, boat or trailer sales, or nursery	2.7 per ksf GFA interior sales area, plus 1.5 per ksf GFA interior or storage/display area, plus 2 per service bay
Barber shop or beauty parlor	(1 per 100) sq.ft. floor area
Professional	
General Business Offices	3.6 per ksf for GFA<250 ksf, 3.35 per ksf GLA>250 ksf
Bank Branch w/ Drive In	5.5 per ksf GFA
Data Processing/ Telemarketing	6.0 per ksf GFA
Medical or dental offices	4.5 per ksf GFA
Clinic (medical offices w/ outpatient treatment; no overnight stays)	5.5 per ksf GFA
Food & Beverage	
Fine Dining	21.5 per ksf GFA
Casual Restaurant (w/ Bar)	22.5 per ksf GFA
Family Restaurant (w/out Bar)	16.0 per ksf GFA
Fast Food	15.0 per ksf GFA
Entertainment	
Theater, gymnasium, racetrack, stadium or similar use	.4 per seat
Amusement park	(1 per 1,000) sq.ft. floor area plus (1 per 2) employees

[2] GFA: Ground Floor Area
[3] GLA: Gross Leasable Area

3) **Institutional, public and quasi-public type of development and number of parking spaces.**

Child care center or kindergarten	.35 per person (licensed capacity)
Elementary and Secondary Schools	.35 per student
College and University	Determined by parking study specific to subject institution.
Church, chapel, mortuary, auditorium	.6 per seat
Elderly Housing, Independent Living	.6 per dwelling unit
Elderly Housing, Assisted Living	.4 per dwelling unit
Nursing or convalescent home	1 per room
Hospital	.4 per employee, plus 1 per 3 beds, plus 1 per 5 average daily outpatient treatments, plus 1 per 4 medical staff, plus 1 per student/faculty/staff
Golf course	(8) per hole

4) **Industrial type of development and number of parking spaces.**

Industrial / Storage / Wholesale Utility	2 per ksf GFA
Manufacturing / Light Industrial (single-use)	1.5 per ksf
Industrial Park (multitenant or mix of service, warehouse)	2 per ksf
Warehouse	.7 per ksf GFA
Mini-Warehouse	.25 per ksf
Air, rail or trucking freight terminal	(1) per employee on largest shift

5) Requirements for building or development not specifically listed herein shall be determined by the Community Development Director based upon the requirements of comparable uses listed.

6) Any uses described herein may provide up to 30% of the required number of parking spaces, except ADA-required spaces, as compact spaces, measuring no less than 7 feet 5 inches wide by 15 feet long. Compact spaces shall be clearly marked accordingly.

7) The number of minimum required parking spaces may be reduced by up to 10% if:
   A. The proposal is located within a ¼ mile of an existing or planned transit route, and;
   B. Transit-related amenities such as transit stops, pull-outs, shelters, park-

and-ride lots, transit-oriented development, and transit service on an adjacent street are present or will be provided by the applicant, or,

C. Site has dedicated parking spaces for motorcycles.

Section 3.0070. Off-Street Parking Restrictions

1) Parking spaces in a public street, including an alley, shall not be eligible as fulfilling any part of the parking requirements.
2) Required parking facilities may be located on an adjacent parcel of land or separated only by an alley, provided the adjacent parcel is maintained in the same ownership as the use it is required to serve.
3) Except for industrial uses, required parking shall not be located in a required front or side yard setback area abutting a public street, unless there is a five(5) foot sidewalk in accordance with County standards, and a five(5) foot landscaped buffer separating the parking from on street traffic.
4) Required parking facilities of two or more uses, structures, or parcels of land may be satisfied by the same parking facilities used jointly, to the extent that it can be shown by the owners or operators that the need for the facilities does not materially overlap (e.g. uses primarily of a daytime vs. nighttime nature) and provided that such right of joint use is evidenced by a deed, lease, contract, or similar written instrument establishing such joint use.
5) Required parking shall be available for parking of operable passenger vehicles of residents, customers and employees only, and shall not be used for the storage or display of vehicles or materials.

Section 3.0080. Off-Street Parking Plan

A plan indicating how the off-street parking and loading requirement is to be fulfilled, shall accompany the application for a development permit. The plan shall show all those elements necessary to indicate that these requirements are being fulfilled and shall include but not be limited to:

1) Delineation of individual parking spaces.
2) Circulation area necessary to serve spaces.
3) Access to streets, alleys, and properties to be served.
4) Curb cuts.
5) Dimensions, continuity and substance of screening.
6) Grading, drainage, surfacing and subgrading details.
7) Delineations of all structures or other obstacles to parking and circulation on the site.
8) Specifications as to signs and bumper guards.
9) Pedestrian access ways.

Figure 3: Example Off-Street Parking Plan

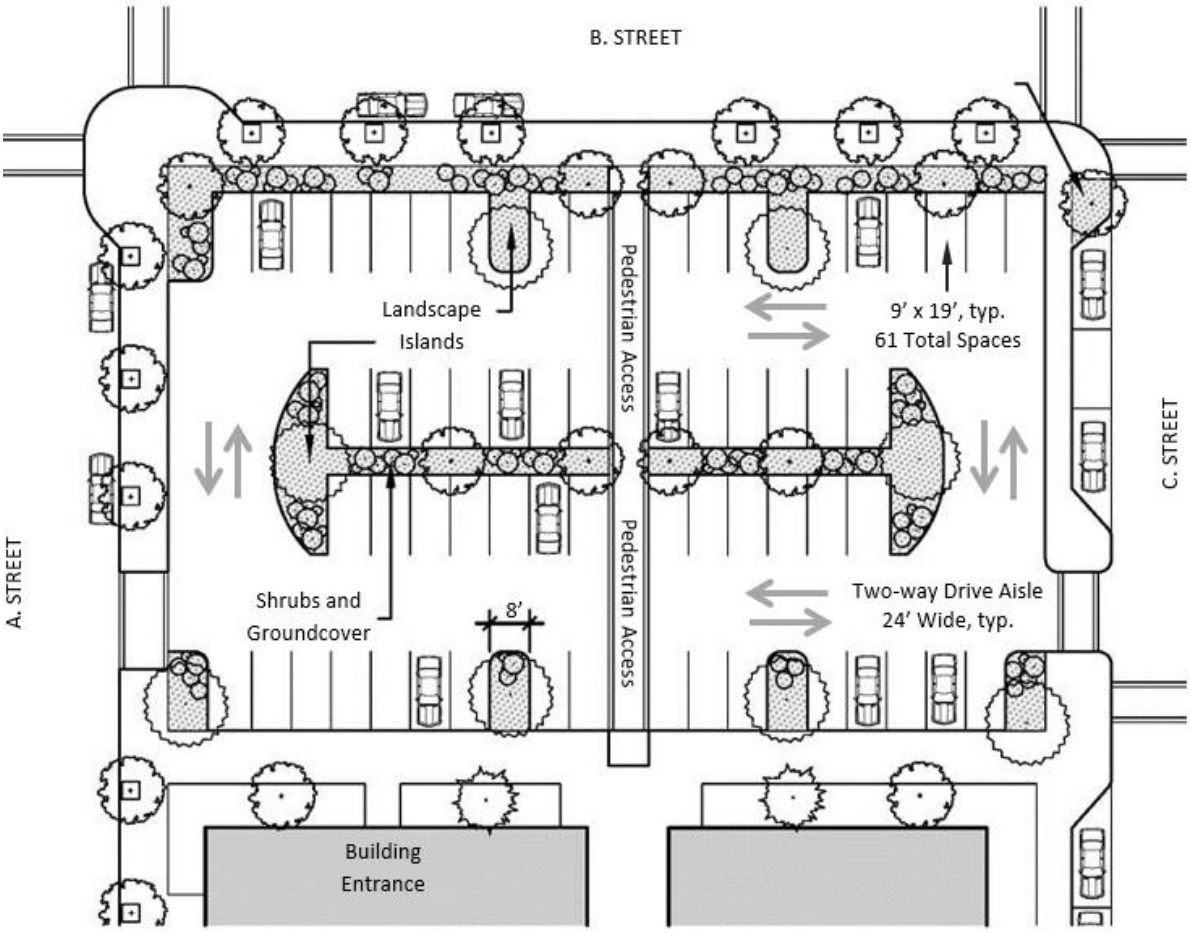

Section 3.0090. Off-Street Parking Construction
Required parking spaces shall be improved and available for use at the time of final building inspection.

Section 3.0100. Design Requirements for Off-Street Parking
Parking spaces shall be a minimum of 9 feet by 19 feet in size. Driveways and turnarounds providing access to parking areas shall conform to the following provisions:

1) Except for a single or two family dwelling, groups of more than three parking spaces shall be provided with adequate aisles or turnaround areas so that all vehicles may enter the street in a forward manner.
2) Except for a single or two family dwelling, more than three parking spaces shall be served by a driveway designed and constructed to facilitate the flow of traffic on and off the site, with due regard to pedestrian and vehicle safety, and shall be clearly and permanently marked and defined. In no case shall two-way and one way driveways be less than eighteen (18) feet and twelve (12) feet in width respectively.

3) Driveways, aisles, turnaround areas and ramps shall have a minimum vertical clearance of twelve (12) feet for their entire length and width but such clearance may be reduced in parking structures.

4) Service drives and accessways to public streets shall have minimum vision clearance area formed by the intersection of the driveway center line, the street right-of-way line, and straight line joining said lines through points twenty (20) feet from their intersection (see diagram). No obstruction including plantings, fences, walls, or temporary or permanent structures, exceeding 2.5 feet in height that has a cross section over one (1) foot shall be located in a clear vision area, except that trees exceeding this height may be located in this area, provided all branches and foliage are removed to a height of eight feet above the grade.

5) The following off-street parking development and maintenance shall apply in all cases, except single and two family dwellings:

   (A) Parking areas, aisles and turnarounds for standing and maneuvering of vehicles shall have durable and dustless surfaces or be graveled to a two inch depth and maintained adequately for all weather use.

   (B) Parking areas, aisles and turnarounds shall have provisions made for the on-site collection of drainage waters to eliminate sheet flow of such waters onto sidewalks, public rights-of-ways, and abutting private property.

   (C) Spaces shall be permanently and clearly marked.

   (D) Wheel stops and bumper guards shall be provided where appropriate for spaces abutting a property line or building, and no vehicle shall overhang a public right-of- way and other property line.

   (E) Where parking abuts a public right-of-way, a wall or screen planting shall be provided sufficient to screen the parking facilities but without causing encroachment into vision clearance areas. Except in residential areas, where a parking facility or driveway is serving other than a one or two family dwelling and is located adjacent to residential, agricultural or institutional uses, a site obscuring fence, wall or evergreen hedge shall be provided on the property line. Such screening shall be maintained in good condition and protected from being damaged by vehicles using the parking area.

   (F) Artificial lighting which may be provided shall be deflected so as not to shine directly into adjoining dwellings or other types of living units and so as not to create hazard to the public use of a street.

   (G) In parking lots three acres and larger intended for use by the general public, the walkway shall be raised or separated from parking, parking aisles and travel lanes by a raised curb, concrete bumpers, bollards, landscaping or other physical barrier. If a raised walkway is used, curb ramps shall be provided in accordance with the Americans With Disabilities Act Accessibility Guidelines.

   (H) Parking lots for commercial and office uses that have designated employee parking and more than 20 parking spaces shall provide at least 10% of the employee parking spaces (with a minimum of one space) as

preferential long-term carpool and vanpool parking spaces. Preferential carpool and vanpool parking spaces shall be closer to the entrances of the building that other parking spaces, with the exception of ADA accessible parking spaces.

Section 3.0110. Bicycle Parking Requirements

In rural communities, new multi-family residential developments of four or more units, retail, office and institutional developments shall provide at least one bicycle parking space for every ten required off-street parking spaces. Transit transfer and park and ride lots, wherever located shall also provide at least one bicycle parking space for every ten off-street parking spaces.

1) Bicycle parking facilities shall be placed in a convenient location near the main entrance of the site's principal use. Where possible, bicycle-parking facilities shall be placed under cover. Bicycle parking areas shall not interfere with parking aisles, landscape areas, or pedestrian ways. For security and convenience purposes, bicycle-parking facilities shall be located in areas visible to the adjacent sidewalks and/or vehicle parking areas within the site.
2) Community Development Director may reduce the number of required bicycle parking spaces on a case- by-case basis if the applicant can demonstrate that the proposed use by its nature would be reasonably anticipated to generate a lesser need for bicycle parking.

Section 3.0120. Loading Facilities

1) The minimum area required for commercial and industrial loading spaces is as follows:
   (A) 250 sq.ft. for buildings of (5,000 to 20,000) sq.ft. of gross floor area.
   (B) 500 sq.ft. for buildings of (20,000 to 50,000) sq.ft. of gross floor area.
   (C) 750 sq.ft. for buildings in excess of (50,000) sq.ft. of gross floor area.
2) The required loading area shall not be less than ten feet in width by twenty-five feet in length and shall have an unobstructed height of fourteen feet.
3) If possible, required loading areas shall be screened from public view, from public streets and adjacent properties.
4) Required loading facilities shall be installed prior to final building inspection and shall be permanently maintained as a condition of use.
5) A driveway designed for continuous forward flow of passenger vehicles for the purpose of loading and unloading children shall be located on the site of a school having a capacity greater than twenty-five students.

<u>SECTION 3.0130. SIGN REQUIREMENTS.</u>

Purpose: These regulations are intended to promote scenic values; prevent unsafe driver distractions; provide orientation and directions; facilitate emergency response; and generally provide useful signs in appropriate areas.

1) **Sign placement:** No permanent sign or temporary sign in excess of six (6) square feet may be placed in or extend over a required non-street side yard or a

street right-of-way, or within 10 feet of the front property line in a required front yard. Temporary signs of no larger than six (6) square feet may feet may be placed in or extend over a required non-street side yard or a street right-of-way, or within 10 feet of the front property line in a required front yard. No sign may be located in a manner that will impair the use of an existing solar energy system on adjoining property. A minimum of 8 feet above sidewalks and 15 feet above driveways shall be provided under free-standing signs.

2) **Sign lighting/Movement:** Any lighting of signs must be directed away from adjacent residential uses and so shielded, installed and aimed that the lighting does not project past the object being illuminated. Illumination of billboards shall be limited to commercial and industrial zoning districts. Except for traffic control signs or traffic hazard warning signs, no sign shall include or be illuminated by a flashing, intermittent, revolving, rotating or moving light or move or have any animated or moving parts.

3) **Signs in any zone:** The following signs are permitted in any zoning district without the need for a permit:
   (A) City limits signs and public notice signs.
   (B) Directional signs for public facilities.
   (C) Traffic control and safety signs.
   (D) Signs placed by the owner to restrict or limit trespassing, hunting or fishing.

4) **Signs in Residential zones:** In Residential zones, signs shall be directed towards facing streets or located at needed points of vehicular access but no closer than 200 feet apart. Signage shall be limited to activities occurring on the property upon which the sign is located as follows:
   (A) A single name plate not exceeding three (3) square feet.
   (B) A sign not exceeding thirty-two square feet pertaining to the or to a construction project, lease, rental, or sale of the property.
   (C) A sign not exceeding 90 square feet advertising a subdivision.
   (D) A sign not exceeding 150 square feet, identifying a multi-family dwelling or motel.
   (E) A sign not exceeding 24 square feet identifying a non-residential use.
   (F) A sign not exceeding 24 square feet identifying a cottage industry.
   (G) A sign not exceeding 24 square feet directing traffic to places of interest to the public, such as tourist accommodations and recreation sites, which would otherwise be difficult to find.
   (H) A sign identifying a home occupation up to 6 square feet in size.
   (I) Signage not exceeding a total of two hundred (200) square feet identifying a mobile home park, recreational campground, primitive campground, commercial farm, or community identification. Individual signs shall not exceed thirty-two (32) square feet in size.
   (J) A sign not exceeding 16 square feet for a bed & breakfast.

The size limitations described in (B) through (J) above apply to each side of a single-sided or double-sided sign.

5) **Signs in Resource zones:** Except for the AF, F-80 and EFU zones signs are not permitted in resource zones. Individual signs may not exceed thirty-two (32) square feet and are limited as follows:
   (A) Signs pertaining to permitted uses in the zone.
   (B) Road identification signs.
6) **Signs in Commercial and Industrial zones:** The following signs are permitted in Commercial and Industrial zones for activities occurring on the property upon which the sign is located:
   (A) Signage not exceeding 200 square feet for commercial establishments. Individual signs may not exceed thirty-two square feet, unless otherwise provided by these regulations.
   (B) Signage not exceeding sixty (60) square feet (including any signage in the canopy, windows or other display areas) for retail or light industrial lease spaces in multi-tenant buildings.
   (C) A temporary sign not exceeding thirty-two square feet in area pertaining either to the lease, rental or sale of the property or to a construction project.
7) **Temporary (including campaign) signs:** In residential, commercial and industrial zones signs placed for a period of not more than six consecutive months are allowed provided they meet the following standards:
   (A) The sign may not exceed thirty-two (32) square feet.
   (B) The sign may not be illuminated.
   (C) The sign shall be removed from the premises fifteen (15) days following the event being advertised or six months after first placement, whichever is earliest.
8) **Calculating Sign Area:** The structure supporting or appearing to support a freestanding sign need not be included in the area of the sign, unless that structural element is conveying information as part of the sign. In calculating the square footage, the width shall be measured at the widest part of the sign, including any cut-outs, and the length shall be measured at the longest part of the sign, including any cut-outs. For multiple-sided signs (signs having 3 or more faces) the area size standard shall be applied to the cumulative total of all sides of the sign.
9) **Copy Area:** Copy is allowed only on the face of the sign. Copy is prohibited in the ledger area of the sign, on the post of the sign, or other structure of the sign, except to the extent that the sign owner's logo or other disclosure is required by law to be placed on the ledger, post or other structure of the sign. For purposes of this Section, "copy" is defined as any text or image.

10) **Non-conforming signs:** Signs and sign structures not conforming to the requirements of this ordinance shall be subject to the following:

(A) Text or images on the face of a legal non-conforming sign may be changed but the sign may not be expanded.
(B) A legal non-conforming sign will be considered abandoned and discontinued if there is no text or image on the display surface for a period of six (6) consecutive months.

11) **Permit required:** Except as otherwise provided, a Type I development permit is required for the following activities:
(A) Installation of a new permanent sign;
(B) A Type 1 permit shall be required for an increase in the face of any permanent sign face by fifty (50) percent or more;
(C) Expanding the text or images of any non-conforming sign.

The Department shall review any proposed sign for conformance with the standards of this section and any requirements under the State building codes.

Figure 4: Area Calculation and Placement of Signs

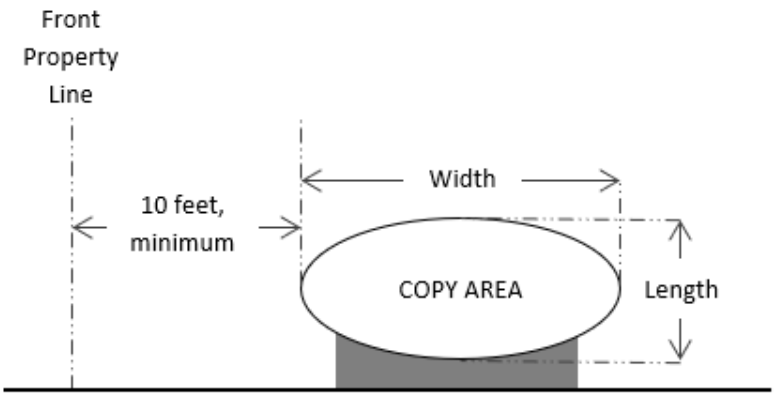

Section 3.0140. General Exception to Yard Standards

1) Cornices, eaves, canopies, sunshades, gutters, chimneys, flues, belt courses, leaders, sills, plasters, lintels, ornamental features, and other similar architectural features may project not more than two (2) feet into a required yard or into required open space as established by coverage standards and must comply with the setback requirements from property line as stated in this Ordinance.

2) The following are exceptions to the front yard requirement for a dwelling:
(A) If there are dwellings on both abutting lots with front yards of less than the depth otherwise required, the front yard for a lot need not exceed the average front yard of the abutting dwellings.
(B) If there is a dwelling on one abutting lot with a front yard of less than the depth otherwise required, the front yard for a lot need not exceed a depth of one-half way between the depth of the abutting lot and the required front yard depth.

3) In zones where front, side or rear setbacks are required, structures up to 2.5 feet (30 inches) in height may be located within that setback area.
4) Following are requirements for fences within yard setbacks:
   (A) Fences over 6 feet in height must be located at or behind the building setback line.
   (B) Fences 6 feet or less may be placed on the property line except within clear vision areas.

Section 3.0150. Oceanfront Setback

For lots abutting the ocean shore, the ocean yard shall be determined by the oceanfront setback line.

1) The location of the oceanfront setback line for a given lot depends on the location of buildings on lots abutting the ocean shore in the vicinity of the proposed building site and:
   (A) For the Clatsop Plains area the location and orientation of the following reference lines:
      1. Described as the construction setback line in Section 5.4020: A line 570 feet landward of the Statutory Vegetation Line established and described by ORS 390.770, or the circa 1920's shoreline, whichever is further inland for the area north of Surf Pines to Columbia River south Jetty.
      2. Described as the Pinehurst construction setback line, in Ordinance 92-90; and
      3. Described as the Surf Pines construction setback line, in Ordinance 83-17.
   (B) For the Southwest Coastal Planning Area and elsewhere along the Clatsop County coast, the location and orientation of the Statutory Vegetation Line or the line of Oceanfront Averaging established upland shore vegetation, whichever is further inland.
2) For the purpose of determining the oceanfront setback line, the term "building" refers to a permanent residential or commercial structure attached to a fixed foundation on a lot. The term "building" does not include accessory structures or uses.
3) The oceanfront setback line that is established shall be parallel with the reference lines established in the preceding Section 3.0150(1) and measurements from buildings shall be perpendicular to these reference lines.
4) The setback of a building from these reference lines is measured from the most seaward point of the building's foundation. A buildings foundation excludes decks, porches, and similar building additions.
5) The oceanfront setback line for a parcel is determined as follows:
   (A) If there are legally constructed buildings within 200 feet of the exterior boundary (side lot lines) of the subject property to both the north and south, the oceanfront setback line for the subject property is the average oceanfront setback of the nearest buildings to the north and south.

(B) If there are legally constructed buildings within 200 feet of the exterior boundary (side lot lines) of the subject property in only one direction, either the north or south, the oceanfront setback line for the subject property is that of the nearest building.

(C) If there are no legally constructed buildings within 200 feet of the exterior boundary (side lot lines) of the subject property, the oceanfront setback line for the subject property shall be established by the geotechnical report.

6) Notwithstanding the above provisions, the Director shall require a greater oceanfront setback where information in a geotechnical report prepared pursuant to Section 5.3000 indicates that a greater oceanfront setback is required to protect the proposed building from an identified coastal erosion hazard.

Figure 5: Construction Setback Line (north of Surf Pines to Columbia River South Jetty):

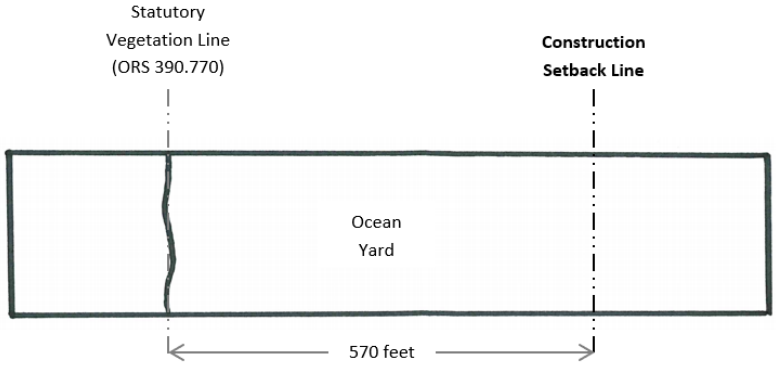

Figure 6: Calculating Oceanfront Setback

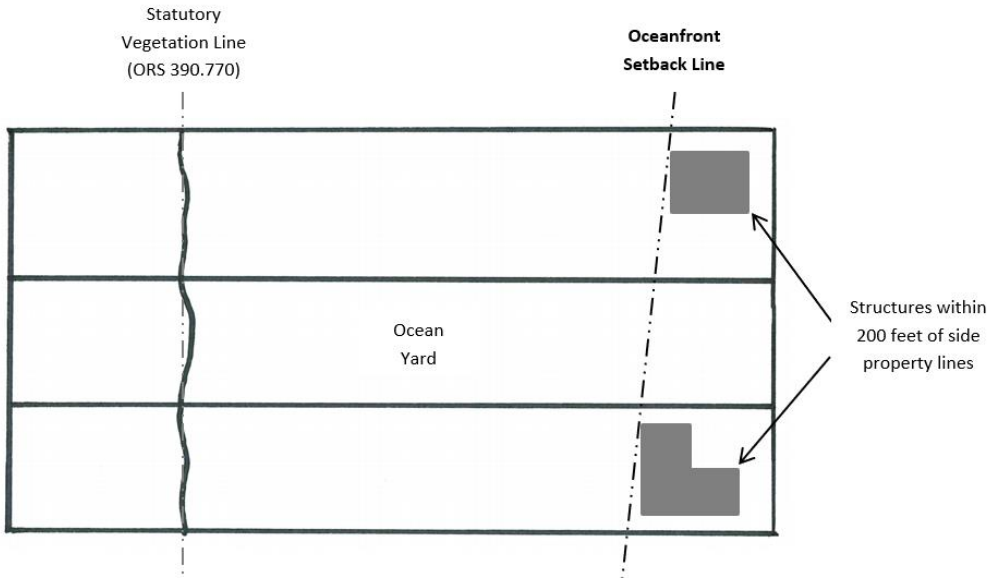

Section 3.0160. Application of Building Heights to Ocean Front Lots

1) Building height restrictions applicable to ocean front lots are intended to apply to property immediately in land of the ocean beach. Partitions or property line adjustments may not be used to change an ocean front lot into a non-ocean front lot.

Section 3.0170. Height Limitations for Non-habitable and Non-storage Structures

1) **Flag poles:** No flag poles shall be greater than six inches in diameter and shall not exceed the maximum height allowed by the zone in which it is located by more than 10 feet. All such poles shall be placed so as to neither obstruct nor obscure the adjacent property owner's lines of vision. Such poles shall not display more than two flags at any one time.
2) **Windmills:** Such structures shall not be any higher than 35 feet above either the average surrounding tree line or the highest structure within 250 feet of the windmill site. If no structure exists within 250 feet of the site of the windmill, the windmill shall not exceed 70 feet in height. A windmill shall be placed such that minimal impact on views from adjacent lots result. All such structures shall be subject to a Type II application procedure.

Section 3.0900. Accessory Dwelling Units.

1) ADUs shall be allowed only on lots or parcels serviced by a State approved Sanitary Sewer.
2) ADUs shall be allowed only in conjunction with parcels containing one single-family dwelling (the "primary dwelling"). A maximum of one ADU or Guesthouse (see “Guesthouse”) is permitted per lot or parcel. ADUs shall not be permitted in conjunction with a duplex or multi-family dwelling.
3) ADUs shall comply with maximum lot coverage and setback requirements applicable to the parcel containing the primary dwelling.
4) The ADU may be created through conversion of an existing structure, or construction of a new structure that is either attached to the primary dwelling or detached.
5) The maximum gross habitable floor area (GHFA) of the ADU shall not exceed 75 percent of the GHFA of the main floor of the primary dwelling on the lot, or 900 square feet, whichever is less. The floor area of any garage shall not be included in the total GHFA.
6) Only one entrance may be located on the front of the existing dwelling unless the existing dwelling contained more than one entrance before the addition of the ADU.
7) In order to maintain a consistent architectural character, Accessory dwellings shall be constructed with similar building materials, architectural design and colors that generally match those used on the primary dwelling, except where the approving hearing body requires different materials and/or detailing to promote compatibility with single family dwellings on abutting lots.

A parcel containing a primary dwelling unit and an ADU shall provide a minimum of three off-street parking spaces designed in accordance with Section 3.0060(1).

Section 3.0190. Temporary Health Hardship

1. One manufactured dwelling or recreational vehicle shall be placed on the same parcel as an existing dwelling for the term if a hardship suffered by the existing resident or a relative of the resident as defined in ORS 215.213 and 215.283.
2. The applicant must be a relative and must submit certification from a physician that there is a necessity for them to reside on the same premises as the relative in order to receive necessary care.
3. The manufactured dwelling or recreational vehicle must be hooked to the existing septic system and water supply on the property. No new systems or hookups may be installed.
4. The permit is effective for one (1) year. No public notice is required in residential zones. Public notice is required in resource zones pursuant to Section 2.2040.
5. Permits for temporary health hardships shall be renewed by January 31st of each year, provided that information, as identified in (2) above, is submitted with the renewal request verifying that the hardship still exists.
6. The applicant shall submit a statement indicating that "the residence for which the health hardship was issued will be removed when the health hardship no longer exists." When the health hardship is resolved, the manufactured dwelling or recreational vehicle shall be removed.
7. For purposes of guaranteeing removal of a manufactured dwelling once the health hardship no longer exists, a performance bond shall be required as per Section 1.1090.
8. The health hardship must meet all other applicable standards in the zone.

SECTION 3.1000. NON-CONFORMING USES AND STRUCTURES

Section 3.1010. Purpose

The purpose of the Non-conforming uses and structures provisions are to establish standards and procedures regulating the continuation, improvement and replacement of structures and uses which do not comply with this Ordinance.

Section 3.1020. Definitions.

The following definitions are applicable to the provisions of Section 3.1000, Non-conforming Uses and Structures.

ALTERATION. A change to a structure, not involving enlargement of the external dimensions of the structure.

EXPANSION. Any increase in any external dimension of a Non-conforming structure.

FLOATING RECREATIONAL CABIN: A moored floating structure used wholly or in part as a dwelling, not physically connected to any upland utility services except electricity,

and is used only periodically or seasonally.

FLOATING RESIDENCE: A dwelling unit which floats on a water body and is designed such that it does not come into contact with land except by ramp. Floating residences may also be referred to as floating homes or houseboats. A floating residence is not equivalent to a floating recreational cabin or other similar recreational structure designed for temporary use. It is also not equivalent to a boathouse, designed for storage of boats.

LAWFULLY MOORED: To be lawfully moored, a floating recreational cabin or floating residence must be constructed upon or attached to piling or a dock by the owner or with the permission of the owner or lawful lessee of the piling or dock. If moored to piling or a dock, such piling or dock must have been installed or constructed and be maintained in compliance with all Federal, State and County requirements. If the floating recreational cabin or floating residence is attached to the shore, such attachment must also be by or with the permission of the owner or lawful lessee of the area of attachment.

LEGAL NON-CONFORMING STRUCTURE: A building or structure that does not conform to one or more standards of the zoning district in which it is located, but which legally existed at the time the applicable section(s) of the zoning district took effect.

LEGAL NON-CONFORMING USE: A use which does not conform to the use regulations of the zoning district in which it is located, but which lawfully occupied a building or land at the time the applicable use regulation took effect.

NON-CONFORMING STRUCTURE: A building or structure that does not conform to one or more standards of the zoning district in which it is located, and which did not legally exist at the time the applicable section(s) of the zoning district took effect.

NON-CONFORMING USE: A use which does not conform to the use regulations of the zoning district in which it is located, and which did not lawfully occupy a building or land at the time the applicable use regulation took effect.

Section 3.1030. Continuance

1) A Non-conforming use legally established prior to the adoption date of this Ordinance may be continued at the level of use (e.g., hours of operation) existing on the date that the use became Non-conforming.
2) A Non-conforming structure legally constructed prior to the effective date of this Ordinance may continue within the building dimensions (height, width and length) in existence on the date that the structure became Non-conforming.
3) The applicant shall bear the burden of proof for establishing that the structure or use was lawfully established.
4) The applicant shall bear the burden of proof for establishing the level of use that existed at the time the use became Non-conforming.
5) The county may allow a property owner, under a Type II procedure, to prove the existence, continuity, nature and extent of the use for the 10-year period

immediately preceding the date of application. If the county finds evidence proving the existence, continuity, nature and extent of the use for the ten-year period preceding application, then such findings shall create a rebuttable presumption that the use, as proven, lawfully existed at the time the applicable Ordinance provision was adopted and has continued uninterrupted until the date of application.

Section 3.1040. Alteration

1) Through Type I procedures alterations shall be permitted to a non-conforming structure, or to a structure devoted to a non-conforming use. Alteration of any such use shall be permitted when necessary to comply with any lawful requirement for alteration in the use. Except as provided in ORS 215.215, a county shall not place conditions upon the continuation or alteration of a use described under this subsection when necessary to comply with state or local health or safety requirements, or to maintain in good repair the existing structures associated with the use. A change of ownership or occupancy shall be permitted.
2) If in a three-year period, alterations to a Non-conforming structure, or to a structure devoted to a Non-conforming use exceeds 75% of the market value of the structure, as indicated by the records of the County Assessor, the structure shall be brought into conformance with the requirements of the Ordinance. [Ord #17-02]

Section 3.1050. Expansion

1) Through a Type II procedure an expansion of a Legal Non-Conforming Structure shall be in conformance with the requirements of this Ordinance, and satisfy the criteria under Section 3.1050(3)(A)-(C) or a variance for the expansion shall be required pursuant to Section 2.8000 Variances.

2) Through a Type IIA procedure an expansion of a Non-Conforming Structure or Use shall be in conformance with the requirements of this Ordinance, and satisfy the criteria under Section 3.1050(3)(A)-(C) below or a variance for the expansion shall be requires pursuant to Section 2.8000 Variances.
3) An expansion of a Legal Non-Conforming Use, or a change in the characteristics of a Legal Non-Conforming Use,(i.e. hours of operation or levels of service provided) may be approved, pursuant to a Type IIa procedure, where the following standards are met:
   (A) The floor area of a building(s) shall not be increased by more than 20%.
   (B) The land area covered by structures shall not be increased by more than 10%.
   (C) The proposed expansion, or proposed change in characteristics of the use will have no greater adverse impact on neighboring areas than the existing use, considering:
      1. Comparison of the following factors:
         (a) Noise, vibration, dust, odor, fume, glare, or smoke

detectable at the property line.

(b) Numbers and kinds of vehicular trips to the site.

(c) Amount and nature of outside storage, loading and parking.

(d) Visual impact.

(e) Hours of operation.

(f) Effect on existing vegetation.

(g) Effect on water drainage and water quality.

(h) Service or other benefit to the area.

(i) Other factors relating to conflicts or incompatibility with the character or needs of the area.

2. The character and history of the use and of development in the surrounding area.

3. An approval may be conditioned to mitigate any potential adverse impacts that have been identified.

Section 3.1060. Changes to a Non-conforming Use

1) A Non-conforming use may only be changed to that of a conforming use. Where such a change is made, the use shall not thereafter be changed back to a Non-conforming use.

Section 3.1070. Replacement and Damage

1) Legal Non-conforming structures and uses.

(A) If a legal non-conforming structure or a structure occupied by a legal non-conforming use is damaged or destroyed by any cause other than an action of the property owner or his authorized agent, it may be reconstructed in conformance with the dimensional standards of the building prior to its destruction. A building permit for its reconstruction shall be obtained within one year of the date of the damage. If a building permit is not obtained within one year, the reconstruction shall be in conformance with the current requirements of this Ordinance. However, by a Type IIa procedure, the planning commission may grant an extension of the one-year period.

(B) If a legal non-conforming structure or a structure devoted to a legal non-conforming use is damaged by an action of the property owner or his authorized agent, to an extent amounting to seventy-five percent (75%) or more of its fair market value as indicated by the records of the County Assessor, it shall be reconstructed in conformance with the current requirements of this Ordinance. The determination of the percentage of fair market value loss shall be based on either square footage of all floor areas or on a third-party appraisal.

(C) If a legal non-conforming structure or a structure devoted to a legal non-conforming use is damaged by an action of the property owner or his authorized agent, to an extent amounting to less than seventy-five percent (75%) of its fair market value as indicated by the records of the County

Assessor, a building permit for its reconstruction shall be obtained within one year of the date of the damage. The determination of the percentage of fair market value loss shall be based on either square footage of all floor areas or on a third-party appraisal. If a building permit is not obtained within one year, the reconstruction shall be in conformance with the current requirements of this Ordinance. However, by a Type IIa procedure, the planning commission may grant an extension of the one-year period.

2) Non-conforming structures and uses.

(A) If a non-conforming structure or a structure devoted to a non-conforming use is damaged or destroyed by any cause other than an action of the property owner or his agent, to an extent amounting to fifty percent (50%) or more of its fair market value as indicated by the records of the County Assessor, it shall be reconstructed in conformance with the current requirements of this Ordinance. The determination of the percentage of fair market value loss shall be based on either square footage of all floor areas or on a third-party appraisal.

(B) If a non-conforming structure or a structure devoted to a non-conforming use is damaged by any cause other than an action of the property owner or his agent, to an extent amounting to less than percent (50%) of its fair market value as indicated by the records of the County Assessor, a building permit for its reconstruction shall be obtained within one year of the date of the damage. The determination of the percentage of fair market value loss shall be based on either square footage of all floor areas or on a third-party appraisal. If a building permit is not obtained within one year, the reconstruction shall be in conformance with the current requirements of this Ordinance. However, by a Type IIa procedure, the planning commission may grant an extension of the one-year period.

Section 3.1080. Completion

A development that is lawfully under construction on the effective date of an ordinance that makes that use or structure Non-conforming may be completed. The use or structure may be used for the purpose for which it was designed, arranged or intended.

Section 3.1090. Discontinuance of Use

If a Non-conforming use is discontinued for a period of one year, subsequent use of the property shall conform to this Ordinance.

Section 3.1100. Compliance with Other Requirements

Notwithstanding the provisions of this section, alteration of a Non-conforming use or a Non- conforming structure shall be allowed if necessary to comply with state or local health or safety requirements.

SECTION 3.2000. EROSION CONTROL DEVELOPMENT STANDARDS

Section 3.2010. Purpose

ARTICLE 3. STRUCTURE SITING AND DEVELOPMENT STANDARDS

The objective of this section is to manage development activities including clearing, grading, excavation and filling of the land, which can lead to soil erosion and the sedimentation of watercourses, wetlands, riparian areas, public and private roadways. The intent of this section is to protect the water quality of surface water, improve fish habitat, and preserve top soil by developing and implementing standards to help reduce soil erosion related to land disturbing activities. In addition, these standards are to serve as guidelines to educate the public on steps to take to reduce soil erosion.

Section 3.2020. Definitions
Certain terms used herein are defined below for the purposes of Section 3.2000.

CLEARING: Any development activity that removes vegetative ground cover.

EROSION/ SOIL EROSION:

1) The wearing away of the land surface by running water, wind, ice, or other geologic agents, including such processes as gravitational creep.
2) Detachment and movement of soil or rock fragments by water, wind, ice, or gravity.

EXCAVATION: Any act by which organic matter, earth, sand, gravel, rock, or any other materials are cut into, dug, uncovered, removed, displaced, relocated, or bulldozed.

FILL: Any human activity by which earth, sand, gravel, rock, or any other materials are deposited, placed, replaced, pushed, dumped, pulled, transported or moved to a new location, including the conditions resulting therefrom.

GRADING: Excavation or fill or any combination thereof, including the conditions resulting from any excavation or fill such as clearing and stripping.

LAND DISTURBING ACTIVITY: Any development activity which removes, disturbs or covers existing vegetative ground cover by physical means including, but not limited to, clearing, grading, stripping, excavation, or fill.

COMMUNITY DEVELOPMENT DIRECTOR: The Community Development Director is that person designated to act as the Clatsop County Community Development Director, any person designated by the Community Development Director to act as the Erosion Control Specialist, or any other agent authorized by Clatsop County to perform those duties relating to erosion control.

ROADWAY: All travel surfaces used for ingress and egress of a site, recorded easements for access purposes or platted roads, developed or undeveloped; including but not limited to, driveways, easements, access points, private roads, public roads, and County roads.

ROUTINE MAINTENANCE: Actions taken on a periodic basis to repair and/or improve the function of existing roadways including, but not limited to, patching, paving, grading

of existing road surfaces and the addition of gravel, placement or replacement of signs, traffic delineators or site posts, and repair or replacement of existing guardrails. The construction of new roadways or improvements to existing roadways including, but not limited to, the creation of new travel lanes, turn lanes, or deceleration lanes, or the addition of new pull-outs, roadside drainage ditches or guardrails; do not constitute routine maintenance.

SEDIMENTATION: The depositing of solid material, both mineral and organic, that is in suspension, is being transported, or has been moved from its site of origin by air, water, or gravity.

STRIPPING: Any activity that removes the vegetative surface cover including tree removal, clearing, and storage or removal of top soil.

WATERCOURSE: Any established channel, bed or drainage way where water draining from a land area collects and/or flows on the ground surface including, but not limited to, bays, lakes, rivers, streams, wetlands, channels, gullies and other natural drainage ways.

Section 3.2030. Erosion Control Plan

1) An Erosion Control Plan shall be required for land disturbing activities, in conjunction with a development permit.
2) Creation and Submittal of Plan: An Erosion Control Plan shall be submitted by the property owner or their agent with the development permit application to the Clatsop County Department of Community Development. This Erosion Control Plan shall be approved by the Community Development Director prior to any development activity on the site. The Erosion Control Plan shall be prepared in accordance with the requirements of this section and the “Erosion Control Guidance” published by the Columbia River Estuary Study Taskforce (CREST). The Plan shall contain the following elements, drawn at an appropriate scale. The level of erosion control activity detail is determined by site conditions and project complexity. The area map and site map may be one document if all elements listed below are addressed.
    (A) An Area Map depicting accurate size and distances for the following elements:
        1) The location of the development site in relation to the property boundaries.
        2) The location of all adjacent roadways.
        3) The location, size and design of all existing and proposed structures.
        4) The location of any lakes, rivers, streams, wetlands, channels, ditches or other watercourses on or near the development site.
        5) The direction surface water flows.
        6) Indication of the north direction.
    (B) A Site Map containing the following elements:

1. The location of existing vegetation adjacent to any watercourse.
2. Areas where vegetative cover will be retained and the type and location of measures taken to protect vegetation from damage.
3. Areas where vegetative cover will be removed and the location of temporary and permanent erosion control measures to be used including, but not limited to: silt fencing, straw bales, graveling, mulching, seeding, and sodding.
4. Indication of the north direction.
5. Indication of slope steepness. Include gradient of surface water flow.
6. The general slope characteristics of adjacent property.
7. Location of the construction access driveway(s) and vehicle parking area(s).
8. Location of soil stockpiles.

(C) An Erosion Control Statement containing the following elements:

1. A schedule of land disturbance activities, project phasing and the time frame for placement of both temporary and permanent erosion and sediment control measures.
2. The name, address and phone number of the person(s) responsible for placement, inspection and maintenance of the temporary and permanent erosion control measures.
3. A statement signed by the property owner and building contractor/ developer certifying that any land clearing, construction, or development involving the movement of earth shall conform to the Erosion Control Plan as approved by the Clatsop County Community Development Director.

3) Plan Review and Approval: Each Erosion Control Plan shall be reviewed, in conjunction with a development permit, pursuant to the standards listed in this section.

(A) The Community Development Director will review each plan to determine if the applicant has adequately addressed the erosion control standards. Approval of this plan will only indicate that the applicant has addressed minimal County standards regarding erosion control and the approval is not a guarantee that erosion will not occur. The burden is upon the applicant to take the necessary measures to reduce soil erosion.

(B) Any disturbance of land in the Beaches and Dunes Overlay (BDO) larger than 3,000 square feet should also have the plan reviewed and approved by the Clatsop Soil and Water Conservation District. The Clatsop Soil and Water Conservation District should be informed at the start of work and also upon completion of site stabilization after the completion of construction.

Section 3.2040. Design and Operation Standards and Requirements

All clearing, grading, stripping, excavation, and filling activities which are subject to the

requirement of an Erosion Control Plan under Section 3.2030(1) shall be subject to the applicable standards and requirements set forth in this section. The standards imposed and the level of erosion control activity detail depend on the site conditions and complexity of the project required to reduce the movement of soil off of the site.

1) Development Site Erosion Control Guidelines

(A) It is the responsibility of the property owner or their agent such as a contractor to take whatever actions necessary to reduce movement of soil off of the site and/or into a watercourse or roadway. These actions include:

1. All riparian areas should have functioning erosion protection measures in place within 24 hours of initiating clearing, grading, stripping, excavation or fill activities on the site.
2. Other on-site erosion control measures should be constructed and functional in accordance with the time schedule approved in the Erosion Control Plan.
3. All required local, state and federal permits and approvals shall be obtained prior to any land disturbance activity on the site. Copies of applicable state and federal permits shall be provided to the County Community Development Department.

(B) Erosion Sediment Control Standards: The standards imposed and the level of erosion control activity detail depend on the site conditions and complexity of the project required to reduce the movement of soil off of the site.

1. At a minimum, the following elements should be addressed in an Erosion Control Plan:
   (a) Erosion control measures should be designed and maintained to insure on-site activities do not impact other properties.
   (b) The use of vegetated buffers is encouraged. The vegetative buffer should be relative in area to the uphill disturbed construction area draining into it. Vegetation along a watercourse shall be subject to the standards in Section 6.2000.
   (c) Permanent soil stabilization measures should be completed within 30 days after completion of construction or development activity ceases on the site.
   (d) All temporary erosion and sediment control measures/ materials should be disposed of within 30 days after final site stabilization is achieved with permanent soil stabilization measures. Trapped sediment and other disturbed soils resulting from temporary sediment control measures should be permanently stabilized to prevent further erosion and sedimentation.

2. Depending on the complexity of the project, the following elements may need to be addressed in an Erosion Control Plan:
   (a) Construct properly installed filter barriers (including filter fences, straw bales, or equivalent control measures) to control off-site runoff as specified in the CREST Erosion Control Guidance.
   (b) Protect storm sewer inlets and culverts by sediment traps or filter barriers.
   (c) Install a graveled (or equivalent) entrance road(s) of sufficient length, depth and width to reduce mud, dirt or other sediment from being tracked onto roadways. If necessary, any sediment reaching a roadway should be removed by shoveling or street cleaning (not flushing) before the end of each workday and transported to a controlled sediment deposit area.

(C) Erosion Prevention Standards: The standards imposed and the level of erosion control activity detail depend on the site conditions and complexity of the project required to reduce the movement of soil off of the site.
1. A minimum amount of vegetation should be disturbed during site preparation.
2. Site clearing should occur no sooner than is necessary prior to construction.
3. Disturbed areas should be stabilized with temporary and/or permanent measures as specified in the time schedule of the approved Erosion Control Plan, or as otherwise required by the Community Development Director, following the end of active disturbance or redisturbance, in accordance with the following criteria:
   (a) Appropriate temporary stabilization measures should include seeding, mulching, sodding, and/or non-vegetative measures such as sediment blankets.
   (b) Appropriate permanent stabilization measures should include seeding, mulching combined with seeding, sodding, landscaping, and non-vegetative measures such as paving, gravel, etc. In dune areas, planting of dune grass may be required.
   (c) Areas having slopes greater than 12 percent should be stabilized with mulch, sod, mat or blanket in combination with seeding, or equivalent.
   (d) Roadway improvement projects resulting in disturbed slopes steeper than 2:1 should be stabilized with sod, mat or sediment blanket in conjunction with seeding, or equivalent.
4. Soil storage piles containing more than 10 cubic yards of material should be covered with a sediment blanket, impervious cover, or

shall incorporate hay or straw into the surface of the soil pile to stabilize it. The pile shall not be placed in a location with a downslope gradient of less than 50 feet to a watercourse, unless the pile is contained by a sediment barrier at the toe of the slope.

5. Land disturbance activities in riparian areas shall be avoided, unless the Community Development Department in conjunction with the other appropriate state, federal and local agencies determines that the development requires the disturbance in the proposed location. If disturbance activities are unavoidable, the following requirements shall be met.
   (a) Construction activity shall be kept out of the stream channel and riparian area to the maximum extent possible. Where construction crossings are necessary, additional state, federal and/or local permits may be required. The property owner or agent shall demonstrate compliance with all applicable regulations and obtain all applicable permits for the project, prior to any land disturbing activity on the site.
   (b) The time and area of disturbance of stream channels and riparian areas shall be kept to the minimum necessary for the project. Instream work shall follow Oregon Department of Fish and Wildlife (ODFW) Guidelines for timing of in-water work to protect fish and wildlife resources. An ODFW fish biologist shall be consulted and approve the erosion control and streambank restabilization plan, prior to the use of fords across fish bearing streams. The stream channel, including bed and banks, shall be restabilized within 24 hours after channel disturbance is completed, interrupted or stopped.

2) Guidance Adopted by Reference: The standards and specifications contained in the “Erosion Control Guidance” cited in Section 3.2040 is hereby incorporated into this section and made a part hereof by reference for the purpose of delineating procedures and methods of operation under erosion and sediment control plans approved under Section 3.2030. In the event of a conflict between the provisions of said guidance and this ordinance, the ordinance shall govern.

3) Maintenance of Control Measures: All soil erosion and sediment control measures necessary to meet the requirements of this ordinance should be maintained to ensure proper function. Maintenance should include, but not be limited to, the following standards:
   (A) Erosion control and prevention measures should be inspected periodically, with a frequency of no less than every 7 days; and
   (B) Erosion control and prevention measures shall be inspected every 24 hours during storm events to insure the measures are functioning properly; and
   (C) Any sediment build-up behind sediment barriers shall be removed and the sediment shall be placed in a controlled sediment area; and

(D) Erosion and sediment control and prevention measures shall be repaired or replaced as frequently as necessary to ensure optimal functioning of the measures.

4) Amendments of Plans: Amendments to a reviewed Erosion Control Plan shall be submitted to the Community Development Director and shall be processed in the same manner as the original plan.

5) Responsibility:

(A) It will be the responsibility of the property owner to comply with the submitted Erosion Control Plan.

(B) The person submitting the erosion control plan shall not be relieved of responsibility for damage to persons or property otherwise imposed by law, and the County or its officers or agents will not be made liable for such damage, by:

(1) the approval of a submittal under this ordinance;

(2) compliance with the provisions of the submitted plan or with conditions attached to it by the County;

(3) failure of County officials to observe or recognize hazardous or unsightly conditions;

(4) failure of County officials to disapprove an erosion control plan submittal; or

(5) exemptions from erosion control plan submittal requirements of this ordinance.

SECTION 3.3000. CLUSTER DEVELOPMENT AND DENSITY TRANSFER

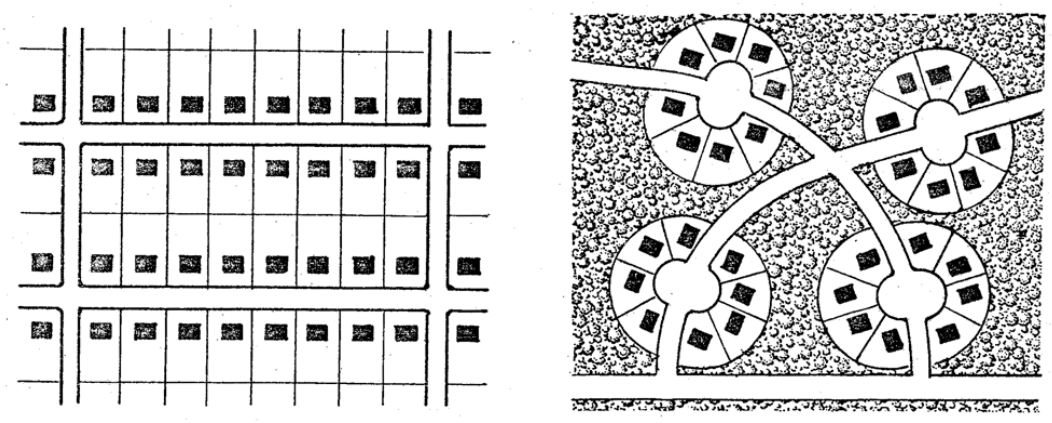

Figure 7: Traditional Subdivision vs. Cluster Development (Image: American Planning Association)

Section 3.3010. Purpose

The intent of these standards is to preserve lands suitable for open space by providing an alternative to the division of rural residential lands into the minimum sized lots allowed in the appropriate zones, and to apply standards to rural residential lands

consistent with state administrative rules governing cluster developments.

Section 3.3020. Procedures for Cluster Development
A cluster development shall comply with the procedures and standards in this section.

1) The applicant shall discuss the proposed cluster development with the staff of the Clatsop County Department of Community Development in a pre-application conference pursuant to Section 2.1070.
2) An applicant for a cluster development must submit a development plan and receive approval of the plan prior to development.
3) As soon as plan approval is given, the plan and any conditions of approval shall be recorded in the Office of the County Clerk by book and page and shall constitute an agreement not to divide the property as long as it remains in its present zoning.
4) (A) As a condition to the approval that may be given for partitioning under this section, the applicant shall provide all deeds or contracts affecting the original farm use parcel to assure that the maximum density will not be exceeded.
   (B) For each partition application under this Standard the Community Development Director or designate shall determine and include with the approved plan map a statement including:
      1) the number of homesite lots allowable on the original parcel,
      2) a legal description of the original parcel,
      3) the number of homesite lots that will result from the proposed partition, and
      4) the number of homesite lots, if any, that could be allowed in the future on the original parcel.

Section 3.3030. Residential Cluster Development Standards
1) The tract of land to be developed shall not be less than 4 contiguous acres in size, provided that land divided by a road shall be deemed to be contiguous.
2) The development may have a density not to exceed the equivalent of the number of dwelling units allowed per acre in the zone or zones.
3) The cluster development shall not contain commercial or industrial developments.
4) The minimum percentage of common open space shall be 30% excluding roads and property under water (MHHW).
5) Attached residences are permitted provided the density allowed per acre in the zone is not exceeded (this does not apply in the Clatsop Plains planning area).
6) The prescribed common open space may be used to buffer adjacent forest, farm, hazard areas or other resource lands such as but not limited to archeological and historical sites, water bodies, etc.
7) Land in the same ownership or under a single development application that is divided by a road can be used in calculating the acreage that can be used in the clustering option.

8) For lands zoned primarily for rural residential uses located outside urban growth boundaries, unincorporated community boundaries, and located outside non-resource lands as defined in OAR660-004-000(5)(3), the following additional conditions must be met.
   (A) The number of new dwellings units to be clustered does not exceed 10;
   (B) None of the new lots or parcels created will be smaller than two acres;
   (C) The development is not served by a new community sewer system or by any extension of a sewer system from within an urban growth boundary or from within an unincorporated community, unless the new service or extension is authorized consistent with OAR 660-011-0060;
   (D) The overall density of the development will not exceed one dwelling for each unit of acreage specified in the base zone designations effective on October 4, 2000 as the minimum lot size for the area;
   (E) Any group or cluster of two or more dwelling units will not force a significant change in accepted farm or forest practices on nearby lands devoted to farm or forest uses and will not significantly increase the cost of accepted farm or forest practices there; and
   (F) For any open space or common area provided as part of the cluster development under this subsection (8), the owner shall submit proof of non-revocable deed restrictions recorded in the deed records. The deed restrictions shall preclude all future rights to construct a dwelling on the lot, parcel or tract designated as open space or common area for as long as the lot, parcel or tract remains outside an urban growth boundary.

Section 3.3040. Additional Residential Cluster Development Standards for the Clatsop Plains Planning Area

1) All planned developments and subdivisions shall designate and retain areas as permanent common open space.
2) The minimum percentage of common open space shall be 30% excluding roads.
3) Permanent common open space shall include, whenever possible, steep dunes which would require substantial alterations for building, buffers along streams, water bodies, deflation plains, and farm and forest lands.
4) Buffers (screening) shall be provided in all subdivisions and planned developments along all property lines adjacent to arterials and/or collectors.
5) Permanent common open space as part of subdivisions or planned developments adjoining one another shall be interrelated and continuous whenever possible. This could mean that the common open space could continuously follow ridge tops, deflation plains or shorelands. The Clatsop County Department of Community Development shall prepare a map of potential systems of common open space to be used as a guide for developers.
6) Streams and drainages which form a system of common open space shall be preserved.

Section 3.3050. Density Transfer Standards for the Clatsop Plains Planning Area

1) Transfer of residential development rights between sites in the Clatsop Plains Planning Area is allowed as follows:
   (A) The remaining lot or parcel of the sending site shall be rezoned to either the Open Space Parks and Recreation zone or Natural Uplands zone or Conservation Shorelands zone or Natural Shorelands zone. The applicant shall file the rezone request at the same time as the density transfer request is submitted, and
   (B) Prior to final approval of a density transfer the County shall require that deed restrictions be filed in the Clatsop County Deed Records in a form approved by County Counsel, that prohibits any further development beyond that envisioned in the approved density transfer until such time as the entire area within the density transfer approval has been included within an urban growth boundary; and
   (C) The Community Development Director shall demarcate the approved restrictions on the official Zoning Map, and
   (D) No lot or parcel of land shall be involved in more than one (1) density transfer transaction, and
   (E) Density transfer goes with the property - not the owner; and
   (F) Minimum lot or parcel size shall be one (1) acre for the receiving site.

2) All lots or parcels sending or receiving density credits shall be recorded in the "Density Table". If a receiving site cannot be identified for all density credits created by the application the applicant shall prepare a notarized affidavit identifying the sending site and number of credits that are not being assigned. This affidavit shall be kept on file with the Community Development Department. The remaining credits may be assigned at a later time to a cluster development in the Clatsop Plains subject the applicable standards of this section.
3) The table tracking all density transfers is maintained administratively by the Clatsop County Community Development Department.

Section 3.3060. Maintenance of Common Open Space and Facilities
Whenever any lands or facilities, including streets or ways, are shown on the final development plan as being held in common, the tenants be created into a non-profit corporation under the laws of the State of Oregon, and that such corporation shall adopt articles of incorporation and by- laws and adopt and impose a declaration of covenants and restrictions on such common areas and facilities to the satisfaction of the Planning Commission. Said association shall be formed and continued for the purpose of maintaining such common open spaces and facilities. It shall be created in such a manner that owners of property shall automatically be members and shall be subject to assessment levies to maintain said areas and facilities for the purposes intended. The period of existence of such associations shall not be less than twenty (20) years, and it shall continue thereafter until a majority vote of the members shall terminate it.

SECTION 3.4000. MOBILE HOMES
SECTION 3.4010. MOBILE HOME PARK DEVELOPMENT

Section 3.4020. Standards for a Mobile Home Park

A mobile home park shall be built to state standards in effect at the time of construction and shall comply with the following additional standards.

Section 3.4030. Permitted Uses Within a Mobile Home Park

No building, structure or land within the boundaries of a mobile home park shall be used for any purpose except for the uses permitted by this article as follows:

1) Mobile homes for residential use only, together with the normal accessory uses such as a cabana, ramada, patio slab, carport, or garage, and storage or washroom building.
2) Private and public utilities.
3) Community recreation facilities, including swimming pools, for residents of the park and guests only.
4) A mobile home park may have one residence for the use of a caretaker or manager responsible for maintaining or operating the property.
5) Occupied, abandoned or unoccupied mobile homes may be abated if they constitute a menace to the public health, safety and welfare.

Section 3.4040. General Conditions and Limitations Within a Mobile Home Park

1) **Area** - The parcel of land to be used for mobile home park purposes shall contain not less than four (4) acres.
2) **Density** - In no event shall the density exceed eight (8) mobile homes per gross acre. Density requirements shall be established as the minimum square footage of gross site area for each mobile home.
3) **Yard Regulations** - For the purposes of this Ordinance, the setback required in each instance shall be a line parallel to and measured at right angles from the front, side or rear property line. The front and rear building setback lines shall extend the full width of the property. The depth of the lot shall not exceed two times the average width. No building, structure or mobile home shall be located so that any part thereof extends into the area between the building setback line and the property line. Fences and signs may be placed within the aforementioned area as an exception to this subsection. Mobile home parks shall set back at least thirty (30) feet from any interior property line abutting residential zoned property. The setback shall be at least fifteen (15) feet from any interior property line abutting commercial or industrial zoned property. The setback from any abutting public street or highway shall be at least twenty-five (25) feet.
4) No mobile home shall occupy more than forty (40) percent of the space provided for it.
5) **Screening** - A sight-obscuring fence or wall of not less than five (5) feet nor more than six (6) feet in height, and/or evergreen planting of not less than five (5) feet in height, shall surround the mobile home park. Such fence, wall or planting may

be placed up to the front property line if adequate vision clearance for entrances and exits is maintained.

6) **Access to a Public Street** - A mobile home park shall not be established on any site that does not have access to any public street which does not meet the County Road Standards in Section S6.000.

7) **Service Buildings** - Service buildings housing sanitation facilities shall be permanent structures, complying with all applicable County and State ordinances and statutes regulating building, electrical installations and plumbing and sanitation systems.

8) **Structures** - Structures located in any mobile home space shall be limited to a storage building, ramada or carport. The storage building, ramada or carport may be combined as one structure. No structural additions shall be built onto or become a part of any mobile home, and no mobile home shall support any building in any manner. The words "structural additions" shall not be construed to exclude the construction of an awning, patio cover, or cabana adjacent to a mobile home. There shall be no outdoor storage of furniture, tools, equipment, building materials or supplies belonging to the occupants or management of the park.

9) A mobile home permitted in the park, if not resting on continuous foundation, shall be provided with a continuous skirting of non-decaying, non-corroding material extending at least six (6) inches into the ground or to an impervious surface. The skirting or continuous foundation shall have provisions for ventilation and access to the space under the unit.

Section 3.4050. Site Requirements Within a Mobile Home Park

The following shall be considered the minimum site requirements for a new mobile home park or the expansion of an existing mobile home park.

1) **Accessway** - Accessways shall connect each mobile home space to a public street and shall have a minimum right-of-way width of thirty-six (36) feet.

2) **Walkways** - Walkways of not less than three (3) feet in width shall be provided from each mobile home space to the service buildings and recreational area or areas, and from the patio to the accessway. A walkway system shall be provided which gives safe, convenient access and should be so designed to be located through interior area, and removed and kept separate from vehicular traffic.

3) **Recreation Area** - A minimum of two hundred (200) square feet of recreation area shall be provided for each mobile home space. The recreation area may be in one or more locations in the park. At least one (1) recreational area shall have a minimum size of five thousand (5,000) square feet (and be of a shape that will make it usable for its intended purpose) and at least fifty (50) percent of the required recreation area shall be provided for use by residents of the entire park.

4) **Electrical** - Approved underground electrical hookups shall be provided for each mobile home space.

5) **Sewage** - Each mobile home space shall be provided with a sewage connection which complies with Oregon State Department of Environmental Quality regulations.
6) **Water Supply** - A continuous supply of pure water for drinking and domestic purposes that meet Oregon State standards shall be supplied by underground facilities to all buildings and mobile home spaces within the park.
7) **Anchors and Tie-Downs** - Each mobile or trailer space shall be equipped with ground anchors of sufficient number and design to accommodate "over the top" and "frame" type tie-downs to anchor the mobile home or trailer in winds up to and including 100 miles per hour. Anchors and tie-downs shall be in place and installed on said mobile home within thirty (30) days of placement on a site.

Section 3.4060. Mobile Home Space Requirements

The minimum mobile home space requirements for a new mobile home park or the expansion of an existing mobile home park are as follows:

1) The average size of a mobile home space in a mobile home park shall not be less than four thousand (4,000) square feet and no space shall be smaller than three thousand (3,000) square feet. No space shall have a width of less than forty (40) feet, nor less than eighty-five (85) feet in depth.
2) No mobile home space shall have a paved stand of less than ten (10) feet in width and less than thirty (30) feet in length.
3) Occupied mobile homes shall be parked only on stands provided, shall be setback a minimum of ten (10) feet from the edge of all accessways, and shall observe the setbacks as established in subsection (e) of Section 7.
4) Each mobile home space shall be provided with a patio having a minimum area of one hundred forty (140) square feet. The patio shall have a minimum width of seven (7) feet and a minimum length of twenty (20) feet and shall be constructed adjacent and parallel to each mobile home parking space.
5) One (1) permanent storage building containing a minimum of thirty-two (32) square feet of floor area shall be provided for each mobile home space. The building height shall not be less than seven (7) feet nor more than nine (9) feet.
6) Minimum space requirements between mobile homes:
    (A) End-to-end, twenty-five (25) feet.
    (B) Temporary or permanent structures situated in one (1) space shall be separated by at least fifteen (15) feet from temporary or permanent structures, or mobile homes in an adjoining space.

Section 3.4070. Improvement Requirements Within a Mobile Home Park

Improvement requirements for a new mobile home park or the expansion of an existing park are as follows:

1) Roadways within an accessway and sidewalk shall be paved with a crushed rock base and asphalt or concrete surfacing according to structural specifications required by the County Roadmaster.

2) The minimum surfaced width of the roadway within an accessway shall be twenty (20) feet if there is no parking allowed, and thirty (30) feet if parking is allowed. The first fifty (50) feet of the accessway measured from the street shall be surfaced to a width of thirty (30) feet and shall be connected to an existing street according to place approved by County Roadmaster or State Highway Engineer.
3) Patios shall be paved with asphalt, concrete, or suitable hard surfaced material.
4) All accessways and walkways within the park shall be lighted at night to provide a minimum of 1.5 foot candles of illumination.
5) Wires for service to light poles and mobile home spaces shall be underground.
6) Mobile home stands shall be paved with asphalt or concrete surfacing, or with crushed rock contained with concrete curbing or pressure treated wooded screens.
7) The mobile home park shall be well drained. Provisions for drainage shall be made in accordance with plans approved by the County Engineer.
8) Recreation areas shall be suitably improved and maintained for recreational purposes as the Planning Commission finds necessary for the types of residents for whom the mobile home park is intended.
9) Public telephone service shall be made available for the mobile home park residents.
10) Adequate and property equipped laundry room facilities shall be made available to the residents of the mobile home park.

Section 3.4080. Plot Plans Required for a Mobile Home Park
The application for a permit to construct a new mobile home park or to expand an existing mobile home park, shall be accompanied by seven (7) copies of the plot plan of the proposed park. The plot plan should show the general layout of the entire mobile home park, and should be drawn to scale not smaller than one (1) inch representing fifty (50) feet. The drawing shall be placed on substantial tracing paper, and shall show the following information:

The planning process for development shall include:
1) Professional Design Team. The applicant for all proposed mobile home parks, pursuant to Section S3.200 shall certify that the talents of one of the following professionals shall be used in the planning process for development:
   (A) An architect licensed by the State of Oregon.
   (B) A registered engineer or registered engineer and land surveyor licensed by the State of Oregon.

   The professional chosen by the applicant(s) from (A) or (B) above shall be designated to be responsible for conferring with the Community Development staff with respect to concept and details of the plan. The selection of the professional coordinator of the design team will not limit the owner of the developer in consulting with the Community Development staff or the Planning Commission.

2) Plot plan of land in area to be developed indicating location of adjacent streets and all private rights-of-way existing and proposed within four hundred (400) feet of the development site as well as topographical lines for each five (5) foot contour.
3) A legal boundary survey.
4) Boundaries and dimensions of the mobile home park.
5) Location and dimensions of each mobile home space. Designate each space by number, letter or name.
6) Name of mobile home park and address.
7) Scale and north point of plan.
8) Location and dimensions of each existing or proposed structure, together with the usage to be contained therein, and approximate location of all entrances thereto, and height and gross floor area thereof.
9) Location and width of access ways.
10) Location and width of walkways.
11) Extent, location, arrangement and proposed improvements of all off-street parking and loading facilities.
12) Extent, location, arrangement, type and proposed improvements of all open space, landscaping, fences and walls.
13) Architectural drawings and sketches demonstrating the planning and character of the proposed development.
14) Total number of mobile home spaces.
15) Location of each lighting fixture for lighting the mobile home spaces and grounds.
16) Location of recreation areas and buildings and area of recreation space in square feet.
17) Location and type of landscaping, fence, wall or combination of any of these or other screening materials.
18) Location of point where mobile home park water and sewer system connects with the public system.
19) Location of available fire and irrigation hydrants.
20) Location of public telephone service for the park.
21) Enlarged plot plan of a typical mobile home space showing location of the stand, patio, storage space, parking, sidewalk, utility connections and landscaping.
22) Detailed plans required - at the time application for a permit to construct a new mobile home park or to expand an existing park, the applicant shall submit seven (7) copies of the required detailed plans:
    (A) New structures.
    (B) Water and sewer systems.
    (C) Electrical systems.
    (D) Road, sidewalk and patio construction.
    (E) Drainage system, including existing and proposed finished grades.
    (F) Recreation area improvements.
23) Before construction of a swimming pool in a mobile home park, two (2) copies of plans approved by the Oregon State Board of Health shall be filed with the

Building Inspector.

Section 3.4090. Improvement Requirements for Expansion of Existing Mobile Home Parks

1) Sewers - Existing sewer lines within the park which do not meet the minimum requirements of this article may remain in use so long as they function properly and the park conforms to the County and State regulations governing sewage and waste water. Any replacement of sewer facilities shall conform to the requirements of new mobile home parks.
2) Water Supply - An existing water supply system which does not meet minimum requirements of this article with respect to general availability, etc. may remain in use so long as it continues to function properly and the park conforms to the County and State regulations governing water supply. Any replacement of water supply facilities shall conform to the requirements for new mobile home parks.
3) Lighting and Wiring - The electrical and lighting systems shall be made to conform to the Uniform Building Code of the State of Oregon.
4) Service Building - Service buildings shall be made to conform to the standards for new mobile home parks.
5) Surfacing for accessways, patios and stands shall be made to conform to the following standards:
   (A) Accessways shall be surfaced to a minimum width of twenty (20) feet with a crushed rock base and asphalt or concrete surfacing according to structural specifications established by the County Engineer. If parking is to be allowed, the minimum surfaced width of the roadway shall be thirty (30) feet.
   (B) Mobile home standards shall be surfaced with crushed gravel to a size equal to or greater than the dimensions of the trailer located on the stand, but shall not be less than ten (10) feet by thirty (30) feet.
   (C) Patios shall have a surface area of at least one hundred forty (140) square feet and a minimum width of seven (7) feet, paved with concrete, asphalt, flagstone or the equivalent.
   (D) Walkways shall have a minimum width of three (3) feet with a paved surface of concrete, asphalt or the equivalent. Walkways shall be provided from each mobile home space to the service buildings. From the patio to the surfaced part of the accessways may be considered as part of the walkway to the service building.
6) Outside Storage - All outside storage in a mobile home park shall be in an enclosed building as required for new mobile home parks.

SECTION 3.4100. STANDARDS FOR MOBILE HOMES ON INDIVIDUAL LOTS

1) The mobile home shall bear an Oregon "Insignia of Compliance" with a date not prior to 1972.
2) Reconstruction or equipment installation shall be State approved as evidences by an appropriate insignia.

3) Mobile homes shall be installed in accordance with State standards and shall be tied down with one of the following:
   (A) A galvanized steel cable of not less than 7/32" diameter having approved clamps and connecting hardware.
   (B) A galvanized aircraft cable of not less than 1/4" diameter having approved clamps and connecting hardware.
   (C) A galvanized steep strap 1-1/4" x .035" having approved clamps and connecting Hardware.
   (D) Any other approved cable or strap with a breaking strength of not less than 4,800 pounds with approved clamps and connecting hardware.
4) Mobile homes shall have continuous skirting of compatible siding material.
5) All mobile homes (whether of residential or storage purposes) shall be securely anchored and tied down within thirty (30) days of being placed on the site.
6) Mobile home add-ons subject to the following:
   (A) The siding on the addition and the siding on the rest of the mobile home should match each other as close as possible.
   (B) The addition should be located on a foundation approved by the Department of Commerce, Building Codes Division.
   (C) Any alteration to the mobile home shall be approved by the Department of Commerce.
   (D) The Department of Community Development will review the request within 180 days of permit issuance for conformance to 1-3 above. If conformance has not occurred within the 180 days permit issuance the matter will be referred to the Planning Commission at its earliest convenience for a hearing to determine how to resolve the issue.

SECTION 3.5000. RECREATION VEHICLE PARKS

Section 3.5010. Purpose

The purpose of the regulations imposed upon recreation vehicle parks is to assure that each park provides safe and sanitary accommodations for the campers, travel trailers and other vehicles which are located temporarily in the park; that the support services provided tourists (utility conveniences and facilities) are adequate for the period of their stay in the park; and that the park does not permit the use of any of its accommodations for mobile home or recreational vehicles which are used for permanent occupancy.

The scope of the park is to encompass additional recreation activities such as overnight tent camping and picnicking, and to only provide those in-park services and supplies required by the clientele.

Section 3.5020. Standards and Requirements

The following standards and requirements shall govern the application of a park in an area in which it is permitted:

1) **Duration of Occupancy**
   No recreation vehicle shall remain the park for more than thirty (30) days in any

sixty (60) day period. No habitable vehicle, which is not a recreation vehicle, shall be allowed in the park for any period with the exception of one mobile home unit for the exclusive use of the park manager and/or caretaker.

2) **Size, Density, Lot Dimension and Setbacks**

(A) Size. Minimum total acreage shall not be less than five (5) acres.

(B) Density. Maximum recreational vehicle spaces per gross acre shall not exceed ten (10) spaces.

(C) The minimum lot area for any recreation vehicle or travel trailer space shall not be less than 3,500 square feet.

(D) The minimum lot width shall be forty (40) feet.

(E) The minimum lot length shall be seventy (70) feet.

(F) The minimum distance between recreation vehicles, and a public street, arterial or highway right-of-way shall be sixty (60) feet.

(G) The minimum distance between recreation vehicles and all property lines shall be ten (10) feet.

(H) The minimum distance between recreation vehicles and other like units shall be twenty- five (25) feet.

(I) The minimum distance between recreation vehicles and public services buildings shall be twenty-five (25) feet.

(J) No recreation vehicle site or structure shall be placed closer than 30 feet to perennial streams or lakes (high water mark) or other bodies of water.

(K) The space provided for a recreation vehicle shall be covered with crushed gravel, or paved with asphalt, concrete or similar material and be designed to provide run-off of surface water. The part of the space which is not occupied by the recreation vehicle, or not part of an outdoor patio, need not be paved or covered with gravel provided the area is landscaped or otherwise treated to prevent dust.

3) **Plot and Building Plans**

Seven (7) copies of the plans drawn to scale required by the Oregon State Health Division shall be submitted to the Clatsop County Community Development Office.

4) **Recreation Areas**

Recreation areas and facilities such as playgrounds, swimming pools and community buildings should be provided to the extent necessary to meet the anticipated needs of the clientele the recreation park is designed to serve.

(A) A developed recreation area shall be provided which contains a minimum of 2,500 square feet or 200 square feet per site space, whichever is the greater.

(B) Provide separate adult and tot recreation areas.

(C) Playground areas shall be protected from main thoroughfares and parking areas.

(D) Recreation areas shall be centrally located to the spaces they are to serve. At least one recreation area shall have a minimum size of five

thousand (5,000) square feet and be of a shape that will make is usable for its intended purpose.

5) **Utilities and Sanitation**
   (A) All facilities and service structures including each recreation vehicle/travel trailer space shall be provided with underground water and utilities.
   (B) Approved public drinking fountains are to be located in playground and service building area.
   (C) Recreation vehicles without bathroom facilities shall be parked within two hundred (200) feet of the park utility building.

6) **Lighting**
   Lighting is required for all common walkways, toilet facilities, service buildings, service building areas and roadways.

7) **Access and Circulation**
   (A) The recreation vehicle park shall be served by hard surfaced roads.
   (B) The recreation vehicle park shall not be located where it will have a hazardous entrance or exit onto a road or onto a road that has a hazardous intersection with a major arterial.
   (C) The amount of traffic generated by the recreation vehicle park shall not exceed the capability of roads serving the development.
   (D) Off highway entry (ingress and egress) shall be provided by the park owner in order to permit entrance/access, as well as parking, through the park toll booth without causing traffic stoppage or unsafe traffic movement on public roads.
   (E) Roadways within the park shall be hard surfaced to a width of twenty (20) feet if no parking is permitted on the roadway, and thirty (30) feet if parking is permitted on the roadway.
   (F) The first fifty (50) feet of access (for ingress and egress) measured from the street shall be hard surfaced to a width of thirty-six (36) feet and shall be connected to an existing street according to plans approved by the County Roadmaster and/or the Oregon State Highway Engineer.
   (G) Street grades shall not be in excess of eight (8) percent at any given point.

8) **Parking**
   (A) The total number of parking spaces in the park, exclusive of parking provided for the use of the manager, employees or specialized additional parking, shall be equal to one 10' x 20' space per camping space. All parking spaces shall be covered with crushed gravel or paved with asphalt, concrete or similar material.
   (B) Additional parking areas for boats, trailers, etc. shall be conveniently located for supervision, but these specialized parking areas shall be separated from all other parking facilities. The ratio of one 10' x 20' additional parking space for every eight (8) camping spaces shall be observed.

9) **Walkways**

(A) A walkway system shall be provided and maintained which gives safe, convenient access to park spaces.
(B) Common trails and walkways shall be provided to connect recreational vehicle sites to common areas, bathroom facilities, service buildings and natural amenities.
(C) Common walkways shall be located through interior areas and be kept separated from vehicular traffic.

10) **Greenbelts, Natural Screening and Open Space**
(A) Ten (10) percent of the gross area of the recreation park must be reserved for open space. This open space is in addition to areas used for lots, roads, walkways, play areas and service areas.
(B) A sight obscuring greenbelt buffer strip shall be required around all sides of the recreation park to a height of eight (8) feet above ground level. This buffer strip shall be composed of natural screening, plantings, or other screens of a material type, size and located as recommended by the Planning Commission.
(C) Vegetative screening is to be provided between recreation park spaces, between spaces and service buildings, as well as between park and commercial activities, etc.

SECTION 3.6000. BEACH FRONT MOTEL DEVELOPMENT

Section 3.6010. Purpose

The purpose of this section is to set forth standards by which resort motels can be placed in beach front areas without resulting in conflicts with the low intensity residential uses and the natural and recreational resources of the area.

Section 3.6020. Development Standards

All beach front resort motel development in the TC zone shall comply with the following standards:

1) Adequate off-street parking for guests and employees shall be provided consistent with parking standards of this Ordinance. The parking areas shall be screened from adjacent residential uses and shall be landscaped.
2) A minimum of 25% of the property shall be retained in landscaping.
3) Service areas, garbage disposal areas and other similar portions of the development shall be screened from view.
4) The height of the development shall not exceed the average height of the residential uses of the area and no parts of the development shall block views of the ocean from residential uses in the area.
5) The construction materials used in the development shall be similar in appearance to material used in neighboring residential dwellings.
6) Exterior lighting for signs, parking area, walkways and other areas shall be lower intensity so as not to create a distraction to adjacent residential uses.

7) Access to and from the development shall be by improved streets having a direct connection to major arterials and/or Highway 101.
8) The development shall not block public access to ocean beaches unless an alternate, suitable access is provided as part of the development.
9) Natural resources and features on or adjacent to the site prior to development shall be retained to the maximum extent possible.

SECTION 3.7000. AMUSEMENT ESTABLISHMENT

Amusement establishment - a commercial amusement establishment may be authorized after consideration of the following factors:

1) Adequacy of access from principal street, together with the probably effect on traffic volumes of abutting and nearby streets;
2) Adequacy of off-street parking;
3) Adequacy of building and site design provisions to minimize glare from the building and site;
4) Noise levels shall not exceed Department of Environmental Quality standards

SECTION 3.8000. HOME OCCUPATION

Section 3.8010. Purpose

The purpose of this section is to establish standards by which limited small-scale business activities, hereafter referred to as Home Occupation, could operate in non-commercial and non- industrial zones. Special standards apply to ensure that home occupations will not be a detriment to the character and livability of the surrounding neighborhood. The standards ensure that the home occupation remains subordinate to the residential use, and that the residential viability of the dwelling is maintained.

Section 3.8020. Home Occupation Standards

The following limitations and requirements shall apply to all Home Occupations:

1) Parking of 1 space per employee must be provided on the same tract of land. Parking spaces needed for employees of a home occupation shall be provided in defined areas of the property which are accessible, usable, designed and surfaced for that purpose.
2) No more than two vehicles or trailers are to be used in the operation of the Home Occupation.
3) No modification shall be made to the dwelling to establish or operate the Home Occupation that would cause it to resemble anything other than a dwelling.
4) All materials, parts, tools and other equipment used in the operation of the Home Occupation shall be stored entirely within the dwelling or accessory building.
5) The Home Occupation shall not involve operations or use of equipment or processes which would produce or cause the emission of gasses, dust, odors, vibration, electrical interference, smoke, noise, or light in a manner likely to cause

offense to irritation to neighboring residents. The Home Occupation shall comply with the applicable federal, state and local regulations.

6) No more than one unlighted sign with a combined area on all surfaces of 6 square feet shall be used to identify the Home Occupation. No other form of identification or advertisement shall be used.

7) (A) Retail Sales shall be allowed provided the activity does not give the outward appearance or manifest the characteristics of a retail business, such as signs other than those permitted under S3.462(6), advertising the dwelling as a business location, generate noise or traffic that adversely affects neighbors, or cause other adverse off-site impacts.

(B) A Complaint from neighbors shall be cause for review of any Home Occupation conducted as a retail business. The review may be a Type II County enforcement proceeding. In such proceeding, the Compliance Order may impose any of the conditions described in 5.025 of the Clatsop County Land and Water Development and Use Ordinance.

8) A Home Occupation in or adjacent to the AF, F-80 and EFU zones shall not involve activities which might disrupt or adversely impact forest use of the parcel or adjacent parcels. The Home Occupation shall also not involve activities sensitive to standard farm or forest management practices.

9) Repair or assembly of any vehicles or engines is not allowed.

10) Deliveries or pick-ups of supplies or products, associated with the home occupation, are allowed to occur between 8:00 a.m. and 6:00 p.m.

11) No outside storage, display of goods or merchandise, or external evidence of a home occupation shall occur except as otherwise permitted in this section.

12) The premises upon which the home occupation is conducted shall be the residence of the person conducting the home occupation.

13) (A) Not more than three (3) non-resident employees or vehicles are allowed on the premises at any one time in conjunction with a home occupation in the RSA-MFR, RA-1, RA-2 and RA-5 zones.

(B) Not more than five (5) non-resident employees or vehicles are allowed on the premises at any one time in conjunction with a home occupation in the AF, F-80 and EFU zones.

14) Parking of any trailers associated with the home occupation shall be within an enclosed building or screened from view by adjoining properties.

Section 3.8030. Bed & Breakfast Establishment Standards

The following standards shall apply to all bed & breakfast establishments in order to preserve the character of the neighborhood or area in which it is to be located. Bed and breakfast establishments shall be allowed in the zones as permitted by this section and as defined by ORS 215.448 (Home Occupations). The regulations have been established to provide an alternative form of lodging for visitors who prefer a residential setting.

1) Number of rental units

(A) 1-5 unit establishment is subject to approval of a Type I development permit and Section 2.070 in the following zones: NC, TC and GC.
(B) 1-5 unit establishment is subject to approval of a Type II conditional use permit and Section 5.000-5.030 in the following zones: RSA-SFR, RSA-MFR, CR, SFR-1, RA-1, RA-2, RA-5, RA-10, EFU, AF, F-80.

2) Establishment shall be operated substantially in:
(A) The dwelling unit, and historical resource buildings; and
(B) It shall not unreasonably interfere with other uses permitted in the zone in which the property is located; and
(C) Will employ not more than three full or part-time persons; and
(D) The premises upon which the bed and breakfast establishment is conducted shall be the residence of the person conducting the establishment.

3) (A) One off-street parking space shall be provided for each rental unit plus the 2 required spaces for the residence of the person conducting the establishment. Off-street parking requirements are subject to the standards in Section 3.0050-3.0120 (Off-Street Parking Required).
(B) Additional parking shall be provided for employees subject to the standards in Section 3.0050-3.0120 (Off-Street Parking Required).
(C) A reduction in the number of rental units may be required if the impacts of the parking area cannot be mitigated.

4) Signing is limited to a six (6) square foot nameplate, non-illuminated (replaces Section 3.8020(6)).

5) All Bed and breakfast establishments shall comply with the applicable state and local health, building and fire code requirements.

6) Bed and breakfast establishments shall comply with the development standards of the base zone, and overlay zone where applicable.

7) Any expansion of an existing building or alterations that increase the intensity of the establishment, may require, at the discretion of the Community Development Director, a Type II conditional use permit subject to Section 2.4000-2.4050, in the following zones:

A. RSA-SFR, RSA-MFR, CR, SFR-1, RA-1, RA-2, RA-5, RA-10, EFU, AF, F-80.

8) Residential structures may be remodeled for the development of a bed and breakfast establishment. However, structural alteration may not be made which prevent the structure from being used as a residence in the future. Internal or external changes which will make the dwelling appear less residential in nature or function are not allowed.

9) An establishment in or adjacent to the AF, F-80 and EFU zones shall not involve activities which might disrupt or adversely impact farm or forest use of the parcel or adjacent parcels.

10) Access to serve a bed and breakfast establishment shall be designed to meet the criteria within Standards Section 3.6520 and Section 3.9540 (Access Control) and the applicable standards within Section 3.9800 (Road Standard Specifications for Design and Construction).

Section 3.8040. Bed & Breakfast Establishment Standards for Standard Sized Lots or Parcels

Bed and breakfast establishments may be considered on parcels or lots that meet the minimum lot size in the following zones as provided by this section:

Zone	Standard
RSA-SFR	Conditional use permit
RSA-MFR	Conditional use permit
CR	Conditional use permit
SFR-1	Conditional use permit
RA-1	Conditional use permit
RA-2	Conditional use permit
RA-5	Conditional use permit
RA-10	Conditional use permit
CBR	Not permitted
NC	Permitted use
TC	Permitted use
GC	Permitted use
EFU	Conditional use permit
AF	Conditional use permit
F-80	Conditional use permit

Section 3.8050. Bed & Breakfast Establishment Standards for Substandard Sized Lots or Parcels

Bed & breakfast establishments may only be considered on parcels or lots that are less than the minimum lot size in the following circumstances:

Zone	Standard
RSA-SFR	Not permitted
RSA-MFR	Conditional use permit
CR	Conditional use permit
SFR-1	Not permitted
RA-1	Conditional use permit
RA-2	Conditional use permit
RA-5	Conditional use permit

Zone	Standard
RA-10	Conditional use permit
CBR	Not permitted
NC	Conditional use permit
TC	Conditional use permit
GC	Conditional use permit
EFU	Conditional use permit
AF	Conditional use permit
F-80	Conditional use permit

SECTION 3.9000. FARM AND FOREST ZONE STANDARDS [ORD. 18-02]

Section 3.9010. Farm, Forest and Natural Resource Uses

1) A farm on which a processing facility is located must provide at least one-quarter of the farm crops processed at the facility. A farm may also be used for an establishment for the slaughter, processing or selling of poultry or poultry products pursuant to ORS 603.038. If a building is established or used for the processing facility or establishment, the farm operator may not devote more than 10,000 square feet of floor area to the processing facility or establishment, exclusive of the floor area designated for preparation, storage or other farm use. A processing facility or establishment must comply with all applicable siting standards but the standards may not be applied in a manner that prohibits the siting of the processing facility or establishment. A county may not approve any division of a lot or parcel that separates a processing facility or establishment from the farm operation on which it is located.
2) A facility for the primary processing of forest products shall not seriously interfere with accepted farming practices and shall be compatible with farm uses described in Section 1.0500. Such facility may be approved for a one-year period that is renewable and is intended to be only portable or temporary in nature. The primary processing of a forest product, as used in this Section, means the use of a portable chipper or stud mill or other similar methods of initial treatment of a forest product in order to enable its shipment to market. Forest products as used in this Section means timber grown upon a tract where the primary processing facility is located.

Section 3.9020 Residential Uses

1) To qualify for a relative farm help dwelling,
   (A) A dwelling shall be occupied by relatives whose assistance in the management and farm use of the existing commercial farming operation is required by the farm operator. However, farming of a marijuana crop may not be used to demonstrate compliance with the approval criteria for a

relative farm help dwelling. The farm operator shall continue to play the predominant role in the management and farm use of the farm.

(B) A relative farm help dwelling must be located on the same lot or parcel as the dwelling of the farm operator and must be on real property used for farm use.

2) A temporary hardship dwelling is subject to the following:

(A) One manufactured dwelling, or recreational vehicle, or the temporary residential use of an existing building may be allowed in conjunction with an existing dwelling as a temporary use for the term of the hardship suffered by the existing resident or relative, subject to the following:

1. The manufactured dwelling shall use the same subsurface sewage disposal system used by the existing dwelling, if that disposal system is adequate to accommodate the additional dwelling. If the manufactured home will use a public sanitary sewer system, such condition will not be required;
2. The county shall review the permit authorizing such manufactured homes every two years; and
3. Within three months of the end of the hardship, the manufactured dwelling or recreational vehicle shall be removed or demolished or, in the case of an existing building, the building shall be removed, demolished or returned to an allowed nonresidential use.

(B) A temporary residence approved under this Section is not eligible for replacement under Section 4.3300(25). Department of Environmental Quality review and removal requirements also apply.

(C) As used in this Section “hardship” means a medical hardship or hardship for the care of an aged or infirm person or persons.

Section 3.9030. Commercial Uses

1) Dog training classes or testing trials conducted outdoors, or in farm buildings that existed on January 1, 2013, are limited as follows:

(A) The number of dogs participating in training does not exceed 10 per training class and the number of training classes to be held on-site does not exceed six per day; and

(B) The number of dogs participating in a testing trial does not exceed 60 and the number of testing trials to be conducted on-site does not exceed four per calendar year.

2) A farm stand structure may be approved if:

(A) The structures are designed and used for sale of farm crops and livestock grown on the farm operation, or grown on the farm operation and other farm operations in the local agricultural area, including the sale of retail incidental items and fee-based activity to promote the sale of farm crops or livestock sold at the farm stand if the annual sales of the incidental items and fees from promotional activity do not make up more than 25 percent of the total annual sales of the farm stand; and

(B) The farm stand structure does not include structures designed for occupancy as a residence or for activities other than the sale of farm crops and livestock and does not include structures for banquets, public gatherings or public entertainment.

(C) As used in this Section, "farm crops or livestock" includes both fresh and processed farm crops and livestock grown on the farm operation, or grown on the farm operation and other farm operations in the local agricultural area.

(D) As used in this Subsection, "processed crops and livestock" includes jams, syrups, apple cider, animal products and other similar farm crops and livestock that have been processed and converted into another product but not prepared food items.

(E) As used in this Section, "local agricultural area" includes Oregon or an adjacent county in Washington, Idaho, Nevada or California that borders the Oregon county in which the farm stand is located.

(F) A farm stand structure may not be used for the sale, or to promote the sale, of marijuana products or extracts.

(G) Farm stand structure development standards

1. Adequate off-street parking will be provided pursuant to provisions of Sections 3.0050-3.0090.
2. Roadways, driveway aprons, driveways and parking surfaces shall be surfaces that prevent dust, and may include paving, gravel, cinders, or bark/wood chips.
3. All vehicle maneuvering will be conducted on site. No vehicle backing or maneuvering shall occur within adjacent roads, streets or highways.
4. No farm stand structure, accessory structure or parking is permitted within the right-of-way.
5. Approval is required from the County Public Works Department regarding adequate egress and access. All egress and access points shall be clearly marked.
6. Vision clearance areas. No visual obstruction (e.g., sign, structure, solid fence, wall, planting or shrub vegetation) may exceed three (3) feet in height within “vision clearance areas” at street intersections.
   a) Service drives shall have a minimum clear-vision area formed by the intersection of the driveway centerline, the road right-of-way line, and a straight line joining said lines through points twenty (20) feet from their intersection.
   b) Height is measured from the top of the curb or, where no curb exists, from the established street center line grade.
   c) Trees exceeding three (3) feet in height may be located in this area, provided all branches and foliage are removed to a height of eight (8) feet above grade.

7. All outdoor light fixtures shall be directed downward, and have full cutoff and full shielding to preserve views of the night sky and to minimize excessive light spillover onto adjacent properties, roads and highways.
8. Signs are permitted consistent with Section 3.0130.

(H) Permit approval is subject to compliance with the County On-site Septic Program or Department of Agriculture requirements and with the development standards of this zone.

3) A destination resort is not permitted on high-value farmland except that existing destination resorts may be expanded subject to Section 3.9080(3).

4) Home occupations shall be subject to the following in addition to Section 3.8000:

(A) Be operated by a resident or employee of a resident of the property on which the business is located;

(B) Employ on the site no more than five full-time or part-time persons at any given time;

(C) Be operated substantially in:

1. The dwelling; or
2. Other buildings normally associated with uses permitted in the zone in which the property is located, except that such other buildings may not be utilized as bed and breakfast facilities or rental units unless they are legal residences.

(D) Not unreasonably interfere with other uses permitted in the zone in which the property is located.

(E) When a bed and breakfast facility is sited as a home occupation on the same tract as a winery established pursuant to Section 3.515 and is operated in association with the winery:

1. The bed and breakfast facility may prepare and serve two meals per day to the registered guests of the bed and breakfast facility; and
2. The meals may be served at the bed and breakfast facility or at the winery.

5) Commercial activities in conjunction with farm use may be approved when:

(A) The commercial activity is either exclusively or primarily a customer or supplier of farm products;

(B) The commercial activity is limited to providing products and services essential to the practice of agriculture by surrounding agricultural operations that are sufficiently important to justify the resulting loss of agricultural land to the commercial activity; or

(C) The commercial activity significantly enhances the farming enterprises of the local agricultural community, of which the land housing the commercial activity is a part. Retail sales of products or services to the general public that take place on a parcel or tract that is different from the parcel or tract on which agricultural product is processed, such as a tasting room with no on-site winery, are not commercial activities in conjunction with farm use.

Section 3.9040. Mineral, Aggregate, Oil and Gas Uses

1) Facilities that batch and blend mineral and aggregate into asphalt cement may not be authorized within two miles of a planted vineyard. Planted vineyard means one or more vineyards totaling 40 acres or more that are planted as of the date the application for batching and blending is filed.
2) Mining, crushing or stockpiling of aggregate and other mineral and subsurface resources are subject to the following:
   (A) A land use permit is required for mining more than one thousand (1,000) cubic yards of martial or excavation preparatory to mining of a surface area of more than one (1) acre.
   (B) A land use permit for mining of aggregate shall be issued only for a site included on the mineral and aggregate inventory in an acknowledged Comprehensive Plan.

Section 3.9050. Transportation Uses

1) A personal-use airport, as used in this Section, prohibits aircraft other than those owned or controlled by the owner of the airstrip. Exceptions to the activities allowed under this definition may be granted through waiver action by the Oregon Department of Aviation in specific instances. A personal-use airport lawfully existing as of September 13, 1975, shall continue to be allowed subject to any applicable rules of the Oregon Department of Aviation.

Section 3.9060. Utility/Solid Waste Disposal Facilities

1) Subject to the issuance of a license, permit or other approval by the Department of Environmental Quality under ORS 454.695, 459.205, 468B.050, 468B.053 or 468B.055, or in compliance with rules adopted under 468B.095, and with the requirements of ORS 215.246, 215.247, 215.249 and 215.251, the land application of reclaimed water, agricultural process or industrial process water or biosolids, or the onsite treatment of septage prior to the land application of biosolids, for agricultural, horticultural or silvicultural production, or for irrigation in connection with a use allowed in an exclusive farm use zone under this division is allowed. For the purposes of this section, onsite treatment of septage prior to the land application of biosolids is limited to treatment using facilities that are portable, temporary and transportable by truck trailer, as defined in ORS 801.580, during a period of time which land application of biosolids is authorized under the license, permit or other approval.
2) Utility facility service lines are utility lines and accessory facilities or structures that end at the point where the utility service is received by the customer and that are located on one or more of the following:
   (A) A public right of way;
   (B) Land immediately adjacent to a public right of way, provided the written consent of all adjacent property owners has been obtained; or
   (C) The property to be served by the utility.
3) A utility facility that is necessary for public service.

(A) A utility facility is necessary for public service if the facility must be sited in the exclusive farm use zone in order to provide the service.

1. To demonstrate that a utility facility is necessary, an applicant must show that reasonable alternatives have been considered and that the facility must be sited in an exclusive farm use zone due to one or more of the following factors:
   a) Technical and engineering feasibility;
   b) The proposed facility is locationally-dependent. A utility facility is locationally-dependent if it must cross land in one or more areas zoned for exclusive farm use in order to achieve a reasonably direct route or to meet unique geographical needs that cannot be satisfied on other lands;
   c) Lack of available urban and nonresource lands;
   d) Availability of existing rights of way;
   e) Public health and safety; and
   f) Other requirements of state and federal agencies.
2. Costs associated with any of the factors listed in Subsection (1 of this subsection may be considered, but cost alone may not be the only consideration in determining that a utility facility is necessary for public service. Land costs shall not be included when considering alternative locations for substantially similar utility facilities and the siting of utility facilities that are not substantially similar.
3. The owner of a utility facility approved under Subsection (A) shall be responsible for restoring, as nearly as possible, to its former condition any agricultural land and associated improvements that are damaged or otherwise disturbed by the siting, maintenance, repair or reconstruction of the facility. Nothing in this Subsection shall prevent the owner of the utility facility from requiring a bond or other security from a contractor or otherwise imposing on a contractor the responsibility for restoration.
4. The county shall impose clear and objective conditions on an application for utility facility siting to mitigate and minimize the impacts of the proposed facility, if any, on surrounding lands devoted to farm use in order to prevent a significant change in accepted farm practices or a significant increase in the cost of farm practices on surrounding farmlands.
5. Utility facilities necessary for public service may include on-site and off-site facilities for temporary workforce housing for workers constructing a utility facility. Such facilities must be removed or converted to an allowed use under the EFU Zone or other statute or rule when project construction is complete. Off-site facilities allowed under this Subsection are subject to Subsection S3.509 Conditional Use Review Criteria. Temporary workforce housing facilities not

included in the initial approval may be considered through a minor amendment request. A minor amendment request shall have no effect on the original approval.

6. In addition to the provisions of Section S3.5013)(A)1 through 4, the establishment or extension of a sewer system as defined by OAR 660-011-0060(1)(f) shall be subject to the provisions of 660-011-0060.

(B) An associated transmission line is necessary for public service upon demonstration that the associated transmission line meets either the following requirements of Subsection 1 or Subsection 2 of this Subsection.

1. An applicant demonstrates that the entire route of the associated transmission line meets at least one of the following requirements:
   a) The associated transmission line is not located on high-value farmland, as defined in ORS 195.300, or on arable land;
   b) The associated transmission line is co-located with an existing transmission line;
   c) The associated transmission line parallels an existing transmission line corridor with the minimum separation necessary for safety; or
   d) The associated transmission line is located within an existing right of way for a linear facility, such as a transmission line, road or railroad, that is located above the surface of the ground.
2. After an evaluation of reasonable alternatives, an applicant demonstrates that the entire route of the associated transmission line meets, subject to Sections S3.5013)(B)3 and 4, two or more of the following criteria:
   a) Technical and engineering feasibility;
   b) The associated transmission line is locationally-dependent because the associated transmission line must cross high-value farmland, as defined in ORS 195.300, or arable land to achieve a reasonably direct route or to meet unique geographical needs that cannot be satisfied on other lands;
   c) Lack of an available existing right of way for a linear facility, such as a transmission line, road or railroad, that is located above the surface of the ground;
   d) Public health and safety; or
   e) Other requirements of state or federal agencies.
3. As pertains to Subsection 2, the applicant shall demonstrate how the applicant will mitigate and minimize the impacts, if any, of the associated transmission line on surrounding lands devoted to farm use in order to prevent a significant change in accepted farm practices or a significant increase in the cost of farm practices on the surrounding farmland.

4. The county may consider costs associated with any of the factors listed in Subsection 2, but consideration of cost may not be the only consideration in determining whether the associated transmission line is necessary for public service.

4) Composting operations and facilities shall meet the performance and permitting requirements of the Department of Environmental Quality under OAR 340-093-0050 and 340-096-0060. Buildings and facilities used in conjunction with the composting operation shall only be those required for the operation of the subject facility. Onsite sales shall be limited to bulk loads of at least one unit (7.5 cubic yards) in size that are transported in one vehicle. This use is not permitted on high value farmland except that existing facilities on high value farmland may be expanded subject to Section S3.5013).

(A) Compost facility operators must prepare, implement and maintain a site-specific Odor Minimization Plan that:

1. Meets the requirements of OAR 340-096-0150;
2. Identifies the distance of the proposed operation to the nearest residential zone;
3. Includes a complaint response protocol;
4. Is submitted to the DEQ with the required permit application; and
5. May be subject to annual review by the county to determine if any revisions are necessary.

(B) Compost operations subject to Section S3.5014)(A) include:

1. A new disposal site for composting that sells, or offers for sale, resulting product; or
2. An existing disposal site for composting that sells, or offers for sale, resulting product that:
3. Accepts as feedstock nonvegetative materials, including dead animals, meat, dairy products and mixed food waste (type 3 feedstock); or
4. Increases the permitted annual tonnage of feedstock used by the disposal site by an amount that requires a new land use approval.

5) Solid waste disposal facilities shall meet the performance and permitting requirements of the Department of Environmental Quality under ORS 459.245, shall meet the requirements of Section 3.9090 and shall comply with the following requirements.

(A) The facility shall be designed to minimize conflicts with existing and permitted uses allowed under plan designations for adjacent parcels as outlined in policies of the Comprehensive Plan.

(B) The facility must be of a size and design to minimize noise or other detrimental effects when located adjacent to farm, forest and grazing dwellings(s) or a residential zone.

(C) The facility shall be fenced when the site is located adjacent to dwelling(s) or a residential zone and landscaping, buffering and/or screening shall be provided.

(D) The facility does not constitute an unnecessary fire hazard. If located in a forested area, the county shall condition approval to ensure that minimum fire safety measures will be taken, which may include but are not limited to the following:
1. The area surrounding the facility is kept free from litter and debris.
2. Fencing will be installed around the facility, if deemed appropriate to protect adjacent farm crops or timber stand.
3. If the proposed facility is located in a forested area, construction materials shall be fire resistant or treated with a fire retardant substance and the applicant will be required to remove forest fuels within 30 feet of structures.

(E) The facility shall adequately protect fish and wildlife resources by meeting minimum Oregon State Department of Forestry regulations.

(F) Access roads or easements for the facility shall be improved to the county's Transportation System Plan standards and comply with grades recommended by the Public Works Director.

(G) Road construction for the facility must be consistent with the intent and purposes set forth in the Oregon Forest Practices Act to minimize soil disturbance and help maintain water quality.

(H) Hours of operation for the facility shall be limited to 8 am – 7 pm.

(I) Comply with other conditions deemed necessary.

Section 3.9070. Parks/Public/Quasi-Public

1) Buildings and facilities associated with a site for the takeoff and landing of model aircraft shall not be more than 500 square feet in floor area or placed on a permanent foundation unless the building or facility preexisted the use approved under this Section. The site shall not include an aggregate surface or hard surface area unless the surface preexisted the use approved under this Section. An owner of property used for the purpose authorized in this Section may charge a person operating the use on the property rent for the property. An operator may charge users of the property a fee that does not exceed the operator's cost to maintain the property, buildings and facilities. As used in this Section, "model aircraft" means a small-scale version of an airplane, glider, helicopter, dirigible or balloon that is used or intended to be used for flight and is controlled by radio, lines or design by a person on the ground.

2) A living history museum shall be related to resource based activities and shall be owned and operated by a governmental agency or a local historical society. A living history museum may include limited commercial activities and facilities that are directly related to the use and enjoyment of the museum and located within authentic buildings of the depicted historic period or the museum administration building, if areas other than an exclusive farm use zone cannot accommodate the museum and related activities or if the museum administration buildings and parking lot are located within one quarter mile of an urban growth boundary. "Local historical society" means the local historical society, recognized as such

by the county governing body and organized under ORS Chapter 65.

3) A community center may provide services to veterans, including but not limited to emergency and transitional shelter, preparation and service of meals, vocational and educational counseling and referral to local, state or federal agencies providing medical, mental health, disability income replacement and substance abuse services, only in a facility that is in existence on January 1, 2006. The services may not include direct delivery of medical, mental health, disability income replacement or substance abuse services.

4) Public parks may include:
   - (A) All outdoor recreation uses allowed under ORS 215.213 or 215.283.
   - (B) The following uses, if authorized in a local or park master plan that is adopted as part of the local comprehensive plan, or if authorized in a state park master plan that is adopted by OPRD:
     1. Campground areas: recreational vehicle sites; tent sites; camper cabins; yurts; teepees; covered wagons; group shelters; campfire program areas; camp stores;
     2. Day use areas: picnic shelters, barbecue areas, swimming areas (not swimming pools), open play fields, play structures;
     3. Recreational trails: walking, hiking, biking, horse, or motorized off-road vehicle trails; trail staging areas;
     4. Boating and fishing facilities: launch ramps and landings, docks, moorage facilities, small boat storage, boating fuel stations, fish cleaning stations, boat sewage pumpout stations;
     5. Amenities related to park use intended only for park visitors and employees: laundry facilities; recreation shops; snack shops not exceeding 1500 square feet of floor area;
     6. Support facilities serving only the park lands wherein the facility is located: water supply facilities, sewage collection and treatment facilities, storm water management facilities, electrical and communication facilities, restrooms and showers, recycling and trash collection facilities, registration buildings, roads and bridges, parking areas and walkways;
     7. Park Maintenance and Management Facilities located within a park: maintenance shops and yards, fuel stations for park vehicles, storage for park equipment and supplies, administrative offices, staff lodging; and
     8. Natural and cultural resource interpretative, educational and informational facilities in state parks: interpretative centers, information/orientation centers, self-supporting interpretative and informational kiosks, natural history or cultural resource museums, natural history or cultural educational facilities, reconstructed historic structures for cultural resource interpretation, retail stores not exceeding 1500 square feet for sale of books and other materials that support park resource interpretation and education.

(C) Visitor lodging and retreat facilities if authorized in a state park master plan that is adopted by OPRD: historic lodges, houses or inns and the following associated uses in a state park retreat area only:
1. Meeting halls not exceeding 2000 square feet of floor area;
2. Dining halls (not restaurants).

5) Schools as formerly allowed pursuant to ORS 215.283(1)(a) that were established on or before January 1, 2009, may be expanded if:
(A) The Conditional Use Review Criteria in Section 3.9090 are met; and
(B) The expansion occurs on the tax lot on which the use was established on or before January 1, 2009 or a tax lot that is contiguous to the tax lot and that was owned by the applicant on January 1, 2009.

6) Private Campgrounds are subject to the following:
(A) Except on a lot or parcel contiguous to a lake or reservoir, private campgrounds shall not be allowed within three miles of an urban growth boundary unless an exception is approved pursuant to ORS 197.732 and OAR chapter 660, division 4. A campground shall be designed and integrated into the rural agricultural and forest environment in a manner that protects the natural amenities of the site and provides buffers of existing native trees and vegetation or other natural features between campsites. Campgrounds shall not include intensively developed recreational uses such as swimming pools, tennis courts, retail stores or gas stations. Overnight temporary use in the same campground by a camper or camper's vehicle shall not exceed a total of 30 days during any consecutive six-month period.
(B) Campsites may be occupied by a tent, travel trailer, yurt or recreational vehicle. Separate sewer, water or electric service hook-ups shall not be provided to individual camp sites except that electrical service may be provided to yurts allowed by Subsection (C).
(C) A private campground may provide yurts for overnight camping. No more than one-third or a maximum of 10 campsites, whichever is smaller, may include a yurt. The yurt shall be located on the ground or on a wood floor with no permanent foundation.

7) Accessory uses provided as part of a golf course shall be limited consistent with the following standards:
(A) An accessory use to a golf course is a facility or improvement that is incidental to the operation of the golf course and is either necessary for the operation and maintenance of the golf course or that provides goods or services customarily provided to golfers at a golf course. An accessory use or activity does not serve the needs of the non-golfing public. Accessory uses to a golf course may include: Parking; maintenance buildings; cart storage and repair; practice range or driving range; clubhouse; restrooms; lockers and showers; food and beverage service; pro shop; a practice or beginners course as part of an 18 hole or larger golf course; or golf tournament. Accessory uses to a golf course do not

include: Sporting facilities unrelated to golfing such as tennis courts, swimming pools, and weight rooms; wholesale or retail operations oriented to the non-golfing public; or housing;

(B) Accessory uses shall be limited in size and orientation on the site to serve the needs of persons and their guests who patronize the golf course to golf. An accessory use that provides commercial services (e.g., pro shop, etc.) shall be located in the clubhouse rather than in separate buildings; and

(C) Accessory uses may include one or more food and beverage service facilities in addition to food and beverage service facilities located in a clubhouse. Food and beverage service facilities must be part of, and incidental to, the operation of the golf course and must be limited in size and orientation on the site to serve only the needs of persons who patronize the golf course and their guests. Accessory food and beverage service facilities shall not be designed for or include structures for banquets, public gatherings or public entertainment.

Section 3.9080. General Standards

1) Three-mile setback. For uses subject to this Subsection:

(A) No enclosed structure with a design capacity greater than 100 people, or group of structures with a total design capacity of greater than 100 people, shall be approved in connection with the use within three miles of an urban growth boundary, unless an exception is approved pursuant to ORS 197.732 and OAR chapter 660, division 4, or unless the structure is described in a master plan adopted under the provisions of OAR chapter 660, division 34.

(B) Any enclosed structures or group of enclosed structures described in Subsection (A) within a tract must be separated by at least one-half mile. For purposes of this Subsection, “tract” means a tract that is in existence as of June 17, 2010.

(C) Existing facilities wholly within a farm use zone may be maintained, enhanced or expanded on the same tract, subject to other requirements of law, but enclosed existing structures within a farm use zone within three miles of an urban growth boundary may not be expanded beyond the requirements of this ordinance.

2) Single-family dwelling deeds. The landowner shall sign and record in the deed records for the county a document binding the landowner, and the landowner's successors in interest, prohibiting them from pursuing a claim for relief or cause of action alleging injury from farming or forest practices for which no action or claim is allowed under ORS 30.936 or 30.937.

3) Expansion standards. Existing facilities wholly within a farm use zone may be maintained, enhanced or expanded on the same tract, subject to other

requirements of law. An existing golf course may be expanded consistent with the requirements of Section 3.9090 and Section 4.3300(22).

Section 3.9090. Conditional Use Review Criteria

1) These requirements are designed to make the use compatible with forest operations and agriculture and to conserve values found on forest lands. The use will not force a significant change in accepted farm or forest practices on surrounding lands devoted to farm or forest use; and
2) The use will not significantly increase the cost of accepted farm or forest practices on surrounding lands devoted to farm or forest use.
3) The proposed use will be compatible with vicinity uses, and satisfies all relevant requirements of this ordinance and the following general criteria:
   (A) The use is consistent with those goals and policies of the Comprehensive Plan which apply to the proposed use;
   (B) The parcel is suitable for the proposed use considering its size, shape, location, topography, existence of improvements and natural features;
   (C) The proposed use will not alter the character of the surrounding area in a manner which substantially limits, impairs or prevents the use of surrounding properties for the permitted uses listed in the underlying zoning district;
   (D) The proposed use is appropriate, considering the adequacy of public facilities and services existing or planned for the area affected by the use; and
   (E) The use is or can be made compatible with existing uses and other allowable uses in the area.

Section 3.9100. Dwellings Customarily Provided in Conjunction with Farm Use

1) Large Tract Standards. On land not identified as high-value farmland as defined in Section 1.0500, a dwelling may be considered customarily provided in conjunction with farm use if:
   (A) The parcel on which the dwelling will be located is at least 160 acres.
   (B) The subject tract is currently employed for farm use.
   (C) The dwelling will be occupied by a person or persons who will be principally engaged in the farm use of the subject tract, such as planting, harvesting, marketing or caring for livestock, at a commercial scale.
   (D) Except for seasonal farmworker housing approved prior to 2001, there is no other dwelling on the subject tract.
2) Farm Income Standards (non-high value). On land not identified as high-value farmland, a dwelling may be considered customarily provided in conjunction with farm use if:
   (A) The subject tract is currently employed for the farm use on which, in each of the last two years or three of the last five years, or in an average of three of the last five years, the farm operator earned the lower of the following:

1. At least $40,000 in gross annual income from the sale of farm products; or
2. Gross annual income of at least the midpoint of the median income range of gross annual sales for farms in the county with gross annual sales of $10,000 or more according to the 1992 Census of Agriculture, Oregon; and

(B) Except for seasonal farmworker housing approved prior to 2001, there is no other dwelling on lands designated for exclusive farm use pursuant to ORS Chapter 215 owned by the farm or ranch operator or on the farm or ranch operation;

(C) The dwelling will be occupied by a person or persons who produced the commodities that grossed the income in Subsection (A); and

(D) In determining the gross income required by Subsection (A):

1. The cost of purchased livestock shall be deducted from the total gross income attributed to the farm or ranch operation;
2. Only gross income from land owned, not leased or rented, shall be counted; and
3. Gross farm income earned from a lot or parcel that has been used previously to qualify another lot or parcel for the construction or siting of a primary farm dwelling may not be used.

3) Farm Income Standards (high-value). On land identified as high-value farmland, a dwelling may be considered customarily provided in conjunction with farm use if:

(A) The subject tract is currently employed for the farm use on which the farm operator earned at least $80,000 in gross annual income from the sale of farm products in each of the last two years or three of the last five years, or in an average of three of the last five years; and

(B) Except for seasonal farmworker housing approved prior to 2001, there is no other dwelling on lands designated for exclusive farm use owned by the farm or ranch operator or on the farm or ranch operation; and

(C) The dwelling will be occupied by a person or persons who produced the commodities that grossed the income in Subsection (A);

(D) In determining the gross income required by Subsection (A):

1. The cost of purchased livestock shall be deducted from the total gross income attributed to the farm or ranch operation;
2. Only gross income from land owned, not leased or rented, shall be counted; and
3. Gross farm income earned from a lot or parcel that has been used previously to qualify another lot or parcel for the construction or siting of a primary farm dwelling may not be used.

4) Farm Capability Standards.

(A) On land not identified as high-value farmland, a dwelling may be considered customarily provided in conjunction with farm use if:

1. The subject tract is at least as large as the median size of those

commercial farm or ranch tracts capable of generating at least $10,000 in annual gross sales that are located within a study area that includes all tracts wholly or partially within one mile from the perimeter of the subject tract;

2. The subject tract is capable of producing at least the median level of annual gross sales of county indicator crops as the same commercial farm or ranch tracts used to calculate the tract size in Subsection 1;
3. The subject tract is currently employed for a farm use at a level capable of producing the annual gross sales required in Subsection 1;
4. The subject lot or parcel on which the dwelling is proposed is not less than 10 acres;
5. Except for seasonal farmworker housing approved prior to 2001, there is no other dwelling on the subject tract;
6. The dwelling will be occupied by a person or persons who will be principally engaged in the farm use of the subject tract, such as planting, harvesting, marketing or caring for livestock, at a commercial scale; and
7. If no farm use has been established at the time of application, land use approval shall be subject to a condition that no building permit may be issued prior to the establishment of the farm use required by Subsection 3.
8. In determining the gross sales capability required by Subsection 3:
   a) The actual or potential cost of purchased livestock shall be deducted from the total gross sales attributed to the farm or ranch tract;
   b) Only actual or potential sales from land owned, not leased or rented, shall be counted; and
   c) actual or potential gross farm sales earned from a lot or parcel that has been used previously to qualify another lot or parcel for the construction or siting of a primary farm dwelling may not be used.

(B) In order to identify the commercial farm or ranch tracts to be used in Subsection 1, the potential gross sales capability of each tract in the study area, including the subject tract, must be determined, using the gross sales figures prepared by the county pursuant to OAR 660-033-0135(2)(c).

5) Additional Farm Income Standards.

(A) For the purpose of Subsections 2) or 3), noncontiguous lots or parcels zoned for farm use in the same county or contiguous counties may be used to meet the gross income requirements. Lots or parcels in eastern or western Oregon may not be used to qualify a dwelling in the other part of the state.

(B) Prior to the final approval for a dwelling authorized by Subsections 2) and 3) that requires one or more contiguous or non-contiguous lots or parcels of a farm or ranch operation to comply with the gross farm income requirements, the applicant shall complete and record with the county clerk the covenants, conditions, and restrictions form provided by the county (Exhibit A to OAR Chapter 660 Division 33). The covenants, conditions and restrictions shall be recorded for each lot or parcel subject to the application for the primary farm dwelling and shall preclude:

1. All future rights to construct a dwelling except for accessory farm dwellings, relative farm assistance dwellings, temporary hardship dwellings or replacement dwellings allowed by ORS Chapter 215; and
2. The use of any gross farm income earned on the lots or parcels to qualify another lot or parcel for a primary farm dwelling.

(C) The covenants, conditions and restrictions are irrevocable, unless a statement of release is signed by an authorized representative of the county or counties where the property subject to the covenants, conditions and restrictions is located;

6) Commercial Dairy Farm Standards. A dwelling may be considered customarily provided in conjunction with a commercial dairy farm and capable of earning the gross annual income requirements by Subsections 2) or 3) above, subject to the following requirements:

(A) The subject tract will be employed as a commercial dairy as defined in Subsection (G);

(B) The dwelling is sited on the same lot or parcel as the buildings required by the commercial dairy;

(C) Except for seasonal farmworker housing approved prior to 2001, there is no other dwelling on the subject tract;

(D) The dwelling will be occupied by a person or persons who will be principally engaged in the operation of the commercial dairy farm, such as the feeding, milking or pasturing of the dairy animals or other farm use activities necessary to the operation of the commercial dairy farm;

(E) The building permits, if required, have been issued for and construction has begun for the buildings and animal waste facilities required for a commercial dairy farm; and

(F) The Oregon Department of Agriculture has approved the following:

1. A permit for a "confined animal feeding operation" under ORS 468B.050 and 468B.200 to 468B.230; and
2. A Producer License for the sale of dairy products under ORS 621.072.

(G) As used in this Section, "commercial dairy farm" is a dairy operation that owns a sufficient number of producing dairy animals capable of earning the gross annual income required by Subsections 2) or 3), whichever is applicable, from the sale of fluid milk.

7) Relocated Farm Operations. A dwelling may be considered customarily provided in conjunction with farm use if:
   (A) Within the previous two years, the applicant owned and operated a different farm or ranch operation that earned the gross farm income in each of the last five years or four of the last seven years as required by Subsection 2) or 3), whichever is applicable;
   (B) The subject lot or parcel on which the dwelling will be located is:
      1. Currently employed for the farm use that produced in each of the last two years or three of the last five years, or in an average of three of the last five years the gross farm income required by Subsection 2) or 3), whichever is applicable; and
      2. At least the size of the applicable minimum lot size under Section 4.3300;
   (C) Except for seasonal farmworker housing approved prior to 2001, there is no other dwelling on the subject tract;
   (D) The dwelling will be occupied by a person or persons who produced the commodities that grossed the income in Subsection (A); and
   (E) In determining the gross income required by Subsection (A) and Subsection (B):
      1. The cost of purchased livestock shall be deducted from the total gross income attributed to the tract; and
      2. Only gross income from land owned, not leased or rented, shall be counted.
8) Farming of a marijuana crop, and the gross sales derived from selling a marijuana crop, may not be used to demonstrate compliance with the approval criteria for a primary farm dwelling.

Section 3.9110. Accessory Farm Dwellings

1) Accessory farm dwellings may be considered customarily provided in conjunction with farm use if each accessory farm dwelling meets all the following requirements:
   (A) The accessory farm dwelling will be occupied by a person or persons who will be principally engaged in the farm use of the land and whose seasonal or year-round assistance in the management of the farm use, such as planting, harvesting, marketing or caring for livestock, is or will be required by the farm operator;
   (B) The accessory farm dwelling will be located:
      1. On the same lot or parcel as the primary farm dwelling;
      2. On the same tract as the primary farm dwelling when the lot or parcel on which the accessory farm dwelling will be sited is consolidated into a single parcel with all other contiguous lots and parcels in the tract;
      3. On a lot or parcel on which the primary farm dwelling is not located, when the accessory farm dwelling is limited to only a manufactured

dwelling with a deed restriction. The deed restriction shall be filed with the county clerk and require the manufactured dwelling to be removed when the lot or parcel is conveyed to another party. The manufactured dwelling may remain if it is reapproved under these provisions;

4. On any lot or parcel, when the accessory farm dwelling is limited to only attached multi-unit residential structures allowed by the applicable state building code or similar types of farmworker housing as that existing on farm or ranch operations registered with the Department of Consumer and Business Services, Oregon Occupational Safety and Health Division under ORS 658.750. A county shall require all accessory farm dwellings approved under this Subsection to be removed, demolished or converted to a nonresidential use when farmworker housing is no longer required. "Farmworker housing" shall have the meaning set forth in 215.278 and not the meaning in 315.163; or

5. On a lot or parcel on which the primary farm dwelling is not located, when the accessory farm dwelling is located on a lot or parcel at least the size of the applicable minimum lot size under ORS 215.780 and the lot or parcel complies with the gross farm income requirements in OAR 660-033-0135(3) or (4), whichever is applicable; and

(C) There is no other dwelling on the lands designated for exclusive farm use owned by the farm operator that is vacant or currently occupied by persons not working on the subject farm or ranch and that could reasonably be used as an accessory farm dwelling.

2) In addition to the requirements in Subsection 1), the primary farm dwelling to which the proposed dwelling would be accessory, meets one of the following:

(A) On land not identified as high-value farmland, the primary farm dwelling is located on a farm or ranch operation that is currently employed for farm use, as defined in ORS 215.203, on which, in each of the last two years or three of the last five years or in an average of three of the last five years, the farm operator earned the lower of the following:

1. At least $40,000 in gross annual income from the sale of farm products. In determining the gross income, the cost of purchased livestock shall be deducted from the total gross income attributed to the tract; or

2. Gross annual income of at least the midpoint of the median income range of gross annual sales for farms in the county with gross annual sales of $10,000 or more according to the 1992 Census of Agriculture, Oregon. In determining the gross income, the cost of purchased livestock shall be deducted from the total gross income attributed to the tract;

(B) On land identified as high-value farmland, the primary farm dwelling is

located on a farm or ranch operation that is currently employed for farm use, as defined in ORS 215.203, on which the farm operator earned at least $80,000 in gross annual income from the sale of farm products in each of the last two years or three of the last five years or in an average of three of the last five years. In determining the gross income, the cost of purchased livestock shall be deducted from the total gross income attributed to the tract; or

(C) It is located on a commercial dairy farm as defined in Section 3.9100(6)(g); and

1. The building permits, if required, have been issued and construction has begun or been completed for the buildings and animal waste facilities required for a commercial dairy farm;
2. The Oregon Department of Agriculture has approved a permit for a "confined animal feeding operation" under ORS 468B.050 and 468B.200 to 468B.230; and
3. A Producer License for the sale of dairy products under ORS 621.072.

3) No division of a lot or parcel for an accessory farm dwelling shall be approved pursuant to this Subsection. If it is determined that an accessory farm dwelling satisfies the requirements of this ordinance, a parcel may be created consistent with the minimum parcel size requirements in Section 4.3300(1).

4) An accessory farm dwelling approved pursuant to this Section cannot later be used to satisfy the requirements for a dwelling not provided in conjunction with farm use pursuant to Section 4.3300(23).

5) For purposes of this Subsection, "accessory farm dwelling" includes all types of residential structures allowed by the applicable state building code.

6) Farming of a marijuana crop shall not be used to demonstrate compliance with the approval criteria for an accessory farm dwelling.

7) No accessory farm dwelling unit may be occupied by a relative of the owner or operator of the farmworker housing. “Relative” means a spouse of the owner or operator or an ancestor, lineal descendant or whole or half sibling of the owner or operator or the spouse of the owner or operator.

Section 3.9120. Lot of Record Dwellings

1) A lot of record dwelling may be approved on a pre-existing lot or parcel if:

(A) The lot or parcel on which the dwelling will be sited was lawfully created and was acquired and owned continuously by the present owner as defined in Subsection 5):

1. Prior to January 1, 1985; or
2. By devise or by intestate succession from a person who acquired and had owned continuously the lot or parcel prior to January 1, 1985.

(B) The tract on which the dwelling will be sited does not include a dwelling;

(C) The lot or parcel on which the dwelling will be sited was part of a tract on

November 4, 1993, no dwelling exists on another lot or parcel that was part of that tract;

(D) The proposed dwelling is not prohibited by, and will comply with, the requirements of the acknowledged comprehensive plan and land use regulations and other provisions of law;

(E) The lot or parcel on which the dwelling will be sited is not high-value farmland except as provided in Subsections 3) and 4); and

(F) When the lot or parcel on which the dwelling will be sited lies within an area designated in the comprehensive plan as habitat of big game, the siting of the dwelling is consistent with the limitations on density upon which the acknowledged comprehensive plan and land use regulations intended to protect the habitat are based.

2) When the lot or parcel on which the dwelling will be sited is part of a tract, the remaining portions of the tract are consolidated into a single lot or parcel when the dwelling is allowed;

3) Notwithstanding the requirements of Section S3.5011)(E), a single-family dwelling may be sited on high-value farmland if:

(A) It meets the other requirements of Subsections 1) and 2);

(B) The lot or parcel is protected as high-value farmland as defined in OAR 660-033-0020(8)(a);

(C) The county determines that:

1. The lot or parcel cannot practicably be managed for farm use, by itself or in conjunction with other land, due to extraordinary circumstances inherent in the land or its physical setting that do not apply generally to other land in the vicinity.

a) For the purposes of this Section, this criterion asks whether the subject lot or parcel can be physically put to farm use without undue hardship or difficulty because of extraordinary circumstances inherent in the land or its physical setting. Neither size alone nor a parcel's limited economic potential demonstrates that a lot or parcel cannot be practicably managed for farm use.

b) Examples of "extraordinary circumstances inherent in the land or its physical setting" include very steep slopes, deep ravines, rivers, streams, roads, railroad or utility lines or other similar natural or physical barriers that by themselves or in combination separate the subject lot or parcel from adjacent agricultural land and prevent it from being practicably managed for farm use by itself or together with adjacent or nearby farms.

c) A lot or parcel that has been put to farm use despite the proximity of a natural barrier or since the placement of a physical barrier shall be presumed manageable for farm use;

2. The dwelling will comply with the provisions of Section 3.9090; and

3. The dwelling will not materially alter the stability of the overall land use pattern in the area by applying the standards set forth in Section 3.9130(2).

4) Notwithstanding the requirements of Section S3.5011)(E), a single-family dwelling may be sited on high-value farmland if:
   (A) It meets the other requirements of Subsections 1) and 2);
   (B) The tract on which the dwelling will be sited is:
      1. Identified in OAR 660-033-0020(8)(d);
      2. Not high-value farmland defined in subsection 1 of the High-Value Farmland definition in Section 1.0500; and
      3. Twenty-one acres or less in size; and
   (C) The tract is bordered on at least 67 percent of its perimeter by tracts that are smaller than 21 acres, and at least two such tracts had dwellings on January 1, 1993; or
   (D) The tract is not a flag lot and is bordered on at least 25 percent of its perimeter by tracts that are smaller than 21 acres, and at least four dwellings existed on January 1, 1993, within one-quarter mile of the center of the subject tract. Up to two of the four dwellings may lie within an urban growth boundary, but only if the subject tract abuts an urban growth boundary; or
   (E) The tract is a flag lot and is bordered on at least 25 percent of its perimeter by tracts that are smaller than 21 acres, and at least four dwellings existed on January 1, 1993, within one-quarter mile of the center of the subject tract and on the same side of the public road that provides access to the subject tract. The governing body of a county must interpret the center of the subject tract as the geographic center of the flag lot if the applicant makes a written request for that interpretation and that interpretation does not cause the center to be located outside the flag lot. Up to two of the four dwellings may lie within an urban growth boundary, but only if the subject tract abuts an urban growth boundary:
      1. “Flag lot” means a tract containing a narrow strip or panhandle of land providing access from the public road to the rest of the tract.
      2. “Geographic center of the flag lot” means the point of intersection of two perpendicular lines of which the first line crosses the midpoint of the longest side of a flag lot, at a 90-degree angle to the side, and the second line crosses the midpoint of the longest adjacent side of the flag lot.

5) For purposes of Subsection 1), “owner” includes the wife, husband, son, daughter, mother, father, brother, brother-in-law, sister, sister-in-law, son-in-law, daughter-in-law, mother-in-law, father-in-law, aunt, uncle, niece, nephew, stepparent, stepchild, grandparent or grandchild of the owner or a business entity owned by any one or a combination of these family members;

6) The county assessor shall be notified that the governing body intends to allow the dwelling.

7) An approved single-family dwelling under this Section may be transferred by a person who has qualified under this Section to any other person after the effective date of the land use decision.
8) The county shall provide notice of all applications for lot of record dwellings on high value farmland to the State Department of Agriculture. Notice shall be provided in accordance with land use regulations and shall be mailed at least 20 calendar days prior to the public hearing.

Section 3.9130. Dwellings Not in Conjunction with Farm Use

Non-farm dwelling. A non-farm dwelling is subject to the following requirements:

1) The dwelling or activities associated with the dwelling will not force a significant change in or significantly increase the cost of accepted farming or forest practices on nearby lands devoted to farm or forest use;
   (A) The dwelling is situated upon a new parcel, or a portion of an existing lot or parcel, that is generally unsuitable land for the production of farm crops and livestock or merchantable tree species, considering the terrain, adverse soil or land conditions, drainage and flooding, vegetation, location and size of the tract. A new parcel or portion of an existing lot or parcel shall not be considered unsuitable solely because of size or location if it can reasonably be put to farm or forest use in conjunction with other land; and
   (B) A new parcel or portion of an existing lot or parcel is not "generally unsuitable" simply because it is too small to be farmed profitably by itself. If a parcel or portion of a lot or parcel can be sold, leased, rented or otherwise managed as a part of a commercial farm or ranch, then it is not "generally unsuitable." A new parcel or portion of an existing lot or parcel is presumed to be suitable if it is composed predominantly of Class I-IV soils. Just because a new parcel or portion of an existing lot or parcel is unsuitable for one farm use does not mean it is not suitable for another farm use; or
   (C) If the lot or parcel is under forest assessment, the dwelling shall be situated upon generally unsuitable land for the production of merchantable tree species recognized by the Forest Practices Rules, considering the terrain, adverse soil or land conditions, drainage and flooding, vegetation, location and size of the parcel. If a lot or parcel is under forest assessment, the area is not "generally unsuitable" simply because it is too small to be managed for forest production profitably by itself. If a lot or parcel under forest assessment can be sold, leased, rented or otherwise managed as a part of a forestry operation, it is not "generally unsuitable". If a lot or parcel is under forest assessment, it is presumed suitable if it is composed predominantly of soils capable of producing 50 cubic feet of wood fiber per acre per year. If a lot or parcel is under forest assessment, to be found compatible and not seriously interfere with forest uses on surrounding land it must not force a significant change in forest practices

or significantly increase the cost of those practices on the surrounding land.

2) The dwelling will not materially alter the stability of the overall land use pattern of the area. In determining whether a proposed nonfarm dwelling will alter the stability of the land use pattern in the area, a county shall consider the cumulative impact of nonfarm dwellings on other lots or parcels in the area similarly situated by applying the standards set forth in (A) through (C) below. If the application involves the creation of a new parcel for the nonfarm dwelling, a county shall consider whether creation of the parcel will lead to creation of other nonfarm parcels, to the detriment of agriculture in the area by applying the standards set forth in (A) through (C) below;

(A) Identify a study area for the cumulative impacts analysis. The study area shall include at least 2,000 acres or a smaller area not less than 1,000 acres, if the smaller area is a distinct agricultural area based on topography, soil types, land use pattern, or the type of farm or ranch operations or practices that distinguish it from other, adjacent agricultural areas. Findings shall describe the study area, its boundaries, the location of the subject parcel within this area, why the selected area is representative of the land use pattern surrounding the subject parcel and is adequate to conduct the analysis required by this standard. Lands zoned for rural residential or other urban or nonresource uses shall not be included in the study area;

(B) Identify within the study area the broad types of farm uses (irrigated or non-irrigated crops, pasture or grazing lands), the number, location and type of existing dwellings (farm, nonfarm, hardship, etc.), and the dwelling development trends since 1993. Determine the potential number of nonfarm/lot-of-record dwellings that could be approved under Sections 3.9120(1) and 3.9130, including identification of predominant soil classifications, the parcels created prior to January 1, 1993 and the parcels larger than the minimum lot size that may be divided to create new parcels for nonfarm dwellings under ORS 215.263(4). The findings shall describe the existing land use pattern of the study area including the distribution and arrangement of existing uses and the land use pattern that could result from approval of the possible nonfarm dwellings under this Subsection; and

(C) Determine whether approval of the proposed nonfarm/lot-of-record dwellings together with existing nonfarm dwellings will materially alter the stability of the land use pattern in the area. The stability of the land use pattern will be materially altered if the cumulative effect of existing and potential nonfarm dwellings will make it more difficult for the existing types of farms in the area to continue operation due to diminished opportunities to expand, purchase or lease farmland, acquire water rights or diminish the number of tracts or acreage in farm use in a manner that will destabilize the overall character of the study area; and

3) If a single-family dwelling is established on a lot or parcel as set forth in 3.9120 or 3.9190(1) through (3), no additional dwelling may later be sited under the provisions of this Section.

Section 3.9140. Alteration, Restoration or Replacement of a Lawfully-Established Dwelling

1) A lawfully established dwelling may be altered, restored or replaced if, when an application for a permit is submitted, the permitting authority finds to its satisfaction, based on substantial evidence that:
   (A) The dwelling to be altered, restored or replaced has, or formerly had:
      1. Intact exterior walls and roof structure;
      2. Indoor plumbing consisting of a kitchen sink, toilet and bathing facilities connected to a sanitary waste disposal system;
      3. Interior wiring for interior lights;
      4. A heating system; and
      5. The dwelling was assessed as a dwelling for purposes of ad valorem taxation for the previous five property tax years, or, if the dwelling has existed for less than five years, from that time.
   (B) Notwithstanding Section S3.5011)(A)5, if the value of the dwelling was eliminated as a result of either of the following circumstances, the dwelling was assessed as a dwelling until such time as the value of the dwelling was eliminated:
      1. The destruction (by fire or natural hazard), or demolition in the case of restoration, of the dwelling; or
      2. The applicant establishes to the satisfaction of the permitting authority that the dwelling was improperly removed from the tax roll by a person other than the current owner. “Improperly removed” means that the dwelling has taxable value in its present state, or had taxable value when the dwelling was first removed from the tax roll or was destroyed by fire or natural hazard, and the county stopped assessing the dwelling even though the current or former owner did not request removal of the dwelling from the tax roll.
2) For replacement of a lawfully established dwelling under Section 4.3300(24):
   (A) The dwelling to be replaced must be removed, demolished or converted to an allowable nonresidential use:
      1. Within one year after the date the replacement dwelling is certified for occupancy pursuant to ORS 455.055; or
      2. If the dwelling to be replaced is, in the discretion of the permitting authority, in such a state of disrepair that the structure is unsafe for occupancy or constitutes an attractive nuisance, on or before a date set by the permitting authority that is not less than 90 days after the replacement permit is issued; and
      3. If a dwelling is removed by moving it off the subject parcel to another location, the applicant must obtain approval from the

permitting authority for the new location.

(B) The applicant must cause to be recorded in the deed records of the county a statement that the dwelling to be replaced has been removed, demolished or converted.

(C) As a condition of approval, if the dwelling to be replaced is located on a portion of the lot or parcel that is not zoned for exclusive farm use, the applicant shall execute and cause to be recorded in the deed records of the county in which the property is located a deed restriction prohibiting the siting of another dwelling on that portion of the lot or parcel. The restriction imposed is irrevocable unless the county planning director, or the director's designee, places a statement of release in the deed records of the county to the effect that the provisions of 2013 Oregon Laws, chapter 462, Section 2 and ORS 215.283 regarding replacement dwellings have changed to allow the lawful siting of another dwelling.

3) A replacement dwelling must comply with applicable building codes, plumbing codes, sanitation codes and other requirements relating to health and safety or to siting at the time of construction. However, the standards may not be applied in a manner that prohibits the siting of the replacement dwelling.

(A) The siting standards of Subsection (B) apply when a dwelling qualifies for replacement because the dwelling:

1. Formerly had the features described in Section S3.5011)(A);
2. Was removed from the tax roll as described in Section S3.5011)(B); or
3. Had a permit that expired as described under Section S3.5014)(C).

(B) The replacement dwelling must be sited on the same lot or parcel:

1. Using all or part of the footprint of the replaced dwelling or near a road, ditch, river, property line, forest boundary or another natural boundary of the lot or parcel; and
2. If possible, for the purpose of minimizing the adverse impacts on resource use of land in the area, within a concentration or cluster of structures or within 500 yards of another structure.

(C) Replacement dwellings that currently have the features described in Section S3.5011)(A) and that have been on the tax roll as described in Section S3.5011)(B) may be sited on any part of the same lot or parcel.

4) A replacement dwelling permit that is issued under Section 4.3300(24):

(A) Is a land use decision as defined in ORS 197.015 where the dwelling to be replaced:

1. Formerly had the features described in Section S3.5011)(A); or
2. Was removed from the tax roll as described in Section S3.5011)(B);

(B) Is not subject to the time to act limits of ORS 215.417; and

(C) If expired before January 1, 2014, shall be deemed to be valid and effective if, before January 1, 2015, the holder of the permit:

1. Removes, demolishes or converts to an allowable nonresidential

use the dwelling to be replaced; and

2. Causes to be recorded in the deed records of the county a statement that the dwelling to be replaced has been removed, demolished or converted.

Section 3.9150. Wineries

1) A winery may be established as a permitted use if the proposed winery will produce wine with a maximum annual production of:
   (A) Less than 50,000 gallons and the winery owner:
      1. Owns an on-site vineyard of at least 15 acres;
      2. Owns a contiguous vineyard of at least 15 acres;
      3. Has a long-term contract for the purchase of all of the grapes from at least 15 acres of a vineyard contiguous to the winery; or
      4. Obtains grapes from any combination of Subsection 1, 2, or 3; or
   (B) At least 50,000 gallons and the winery owner:
      1. Owns an on-site vineyard of at least 40 acres;
      2. Owns a contiguous vineyard of at least 40 acres;
      3. Has a long-term contract for the purchase of all of the grapes from at least 40 acres of a vineyard contiguous to the winery;
      4. Owns an on-site vineyard of at least 15 acres on a tract of at least 40 acres and owns at least 40 additional acres of vineyards in Oregon that are located within 15 miles of the winery site; or
      5. Obtains grapes from any combination of Subsection 1, 2, 3 or 4.
2) In addition to producing and distributing wine, a winery established under this Section may:
   (A) Market and sell wine produced in conjunction with the winery.
   (B) Conduct operations that are directly related to the sale or marketing of wine produced in conjunction with the winery, including:
      1. Wine tastings in a tasting room or other location on the premises occupied by the winery;
      2. Wine club activities;
      3. Winemaker luncheons and dinners;
      4. Winery and vineyard tours;
      5. Meetings or business activities with winery suppliers, distributors, wholesale customers and wine-industry members;
      6. Winery staff activities;
      7. Open house promotions of wine produced in conjunction with the winery; and
      8. Similar activities conducted for the primary purpose of promoting wine produced in conjunction with the winery.
   (C) Market and sell items directly related to the sale or promotion of wine produced in conjunction with the winery, the marketing and sale of which is incidental to on-site retail sale of wine, including food and beverages:
      1. Required to be made available in conjunction with the consumption

of wine on the premises by the Liquor Control Act or rules adopted under the Liquor Control Act; or

2. Served in conjunction with an activity authorized by Section S3.5012)(B), (D), or (E).

(D) Carry out agri-tourism or other commercial events on the tract occupied by the winery subject to subsection 5.

(E) Host charitable activities for which the winery does not charge a facility rental fee.

3) A winery may include on-site kitchen facilities licensed by the Oregon Health Authority under ORS 624.010 to 624.121 for the preparation of food and beverages described in Section S3.5012)(C). Food and beverage services authorized under Section S3.5012)(C) may not utilize menu options or meal services that cause the kitchen facilities to function as a café or other dining establishment open to the public.

4) The gross income of the winery from the sale of incidental items or services provided pursuant to Section S3.5012)(C) to (E) may not exceed 25 percent of the gross income from the on-site retail sale of wine produced in conjunction with the winery. The gross income of a winery does not include income received by third parties unaffiliated with the winery. At the request of the county, the winery shall submit to the county a written statement that is prepared by a certified public accountant and certifies the compliance of the winery with this Subsection for the previous tax year.

5) A winery may carry out up to 18 days of agri-tourism or other commercial events annually on the tract occupied by the winery. If a winery conducts agri-tourism or other commercial events authorized under this Section, the winery may not conduct agri-tourism or other commercial events or activities authorized by Section S3.5151) to 4). The requirements of the Agri-tourism permit must be met.

6) A winery operating under this Section shall provide parking for all activities or uses of the lot, parcel or tract on which the winery is established.

7) Events described in S3.5015) are subject to the requirements of Section S3.5158), Agri-Tourism and other Commercial Events or Activities Permit.

8) Prior to the issuance of a permit to establish a winery under Section S3.5011), the applicant shall show that vineyards described in Section S3.5011) have been planted or that the contract has been executed, as applicable.

9) Standards imposed on the siting of a winery shall be limited solely to each of the following for the sole purpose of limiting demonstrated conflicts with accepted farming or forest practices on adjacent lands:

(A) Establishment of a setback of at least 100 feet from all property lines for the winery and all public gathering places unless the local government grants an adjustment or variance allowing a setback of less than 100 feet; and

(B) Provision of direct road access and internal circulation.

10) In addition to a winery permitted in Sections S3.5011) to S3.5019), a winery may be established if:

(A) The winery owns and is sited on a tract of 80 acres or more, at least 50 acres of which is a vineyard;
(B) The winery owns at least 80 additional acres of planted vineyards in Oregon that need not be contiguous to the acreage described in Section S3.50110)(A); and
(C) The winery has produced annually, at the same or a different location, at least 150,000 gallons of wine in at least three of the five calendar years before the winery is established under this Subsection.

11) In addition to producing and distributing wine, a winery described in Section S3.50110) may:
(A) Market and sell wine produced in conjunction with the winery;
(B) Conduct operations that are directly related to the sale or marketing of wine produced in conjunction with the winery, including:
1. Wine tastings in a tasting room or other location on the premises occupied by the winery;
2. Wine club activities;
3. Winemaker luncheons and dinners;
4. Winery and vineyard tours;
5. Meetings or business activities with winery suppliers, distributors, wholesale customers and wine-industry members;
6. Winery staff activities;
7. Open house promotions of wine produced in conjunction with the winery; and
8. Similar activities conducted for the primary purpose of promoting wine produced in conjunction with the winery;
(C) Market and sell items directly related to the sale or promotion of wine produced in conjunction with the winery, the marketing and sale of which is incidental to retail sale of wine on-site, including food and beverages:
1. Required to be made available in conjunction with the consumption of wine on the premises by the Liquor Control Act or rules adopted under the Liquor Control Act; or
2. Served in conjunction with an activity authorized by Section S3.50111)(B)2, 4, or 5;
(D) Provide services, including agri-tourism or other commercial events, hosted by the winery or patrons of the winery, at which wine produced in conjunction with the winery is featured, that:
1. Are directly related to the sale or promotion of wine produced in conjunction with the winery;
2. Are incidental to the retail sale of wine on-site; and
3. Are limited to 25 days or fewer in a calendar year; and
4. Host charitable activities for which the winery does not charge a facility rental fee.

12) Income requirements:
(A) The gross income of the winery from the sale of incidental items pursuant

to Section S3.50111)(C) and services provided pursuant to Section S3.50111)(D) may not exceed 25 percent of the gross income from the on-site retail sale of wine produced in conjunction with the winery.

(B) At the request of a local government with land use jurisdiction over the site of a winery, the winery shall submit to the local government a written statement, prepared by a certified public accountant, that certifies compliance with Subsection (A) for the previous tax year.

13) A winery permitted under Subsection 10):

(A) Shall provide parking for all activities or uses of the lot, parcel or tract on which the winery is established.

(B) May operate a restaurant, as defined in ORS 624.010, in which food is prepared for consumption on the premises of the winery.

14) Permit requirements:

(A) A winery shall obtain a permit if the winery operates a restaurant that is open to the public for more than 25 days in a calendar year or provides for agri-tourism or other commercial events authorized under Section S3.50111)(D) occurring on more than 25 days in a calendar year.

(B) In addition to any other requirements, a local government may approve a permit application under this Subsection if the local government finds that the authorized activity:

1. Complies with the standards described in Sections S3.5011) and 2);
2. Is incidental and subordinate to the retail sale of wine produced in conjunction with the winery; and
3. Does not materially alter the stability of the land use pattern in the area.

(C) If the local government issues a permit under this Subsection for agri-tourism or other commercial events, the local government shall review the permit at least once every five years and, if appropriate, may renew the permit.

15) A person may not have a substantial ownership interest in more than one winery operating a restaurant, as permitted in Subsection 13).

16) Prior to the issuance of a permit to establish a winery under Subsection 10), the applicant shall show that vineyards described in Subsection 10) have been planted.

17) A winery operating under Subsection 10) shall provide for:

(A) Establishment of a setback of at least 100 feet from all property lines for the winery and all public gathering places; and

(B) Direct road access and internal circulation.

18) A winery operating under Subsection S3.50110) may receive a permit to host outdoor concerts for which admission is charged, facility rentals or celebratory events if the winery received a permit in similar circumstances before August 2, 2011.

19) As used in this Section:

(A) "Agri-tourism or other commercial events" includes outdoor concerts for which admission is charged, educational, cultural, health or lifestyle events, facility rentals, celebratory gatherings and other events at which the promotion of wine produced in conjunction with the winery is a secondary purpose of the event.

(B) "On-site retail sale" includes the retail sale of wine in person at the winery site, through a wine club or over the Internet or telephone.

Section 3.9160. Agri-Tourism and Other Commercial Events

The following agri-tourism and other commercial events or activities that are related to and supportive of agriculture may be established:

1) A single agri-tourism or other commercial event or activity on a tract in a calendar year that is personal to the applicant and is not transferred by, or transferable with, a conveyance of the tract, if the agri-tourism or other commercial event or activity meets any local standards that apply and:
   - (A) The agri-tourism or other commercial event or activity is incidental and subordinate to existing farm use on the tract;
   - (B) The duration of the agri-tourism or other commercial event or activity does not exceed 72 consecutive hours;
   - (C) The maximum attendance at the agri-tourism or other commercial event or activity does not exceed 500 people;
   - (D) The maximum number of motor vehicles parked at the site of the agri-tourism or other commercial event or activity does not exceed 250 vehicles;
   - (E) The agri-tourism or other commercial event or activity complies with the standards described in Sections S3.5011) and 2);
   - (F) The agri-tourism or other commercial event or activity occurs outdoors, in temporary structures, or in existing permitted structures, subject to health and fire and life safety requirements; and
   - (G) The agri-tourism or other commercial event or activity complies with conditions established for:
     - 1) Planned hours of operation;
     - 2) Access, egress and parking;
     - 3) A traffic management plan that identifies the projected number of vehicles and any anticipated use of public roads:
     - 4) Sanitation and solid waste; and]
     - 5) Must comply with the requirements in S3.5152).
2) In the alternative to Subsections 1) and 3), the county may authorize, through an expedited, single-event license, a single agri-tourism or other commercial event or activity on a tract in a calendar year by an expedited, single-event license that is personal to the applicant and is not transferred by, or transferable with, a conveyance of the tract. A decision concerning an expedited, single-event license is not a land use decision, as defined in ORS 197.015. To approve an expedited, single-event license, the governing body of a county or its designee

must determine that the proposed agri-tourism or other commercial event or activity meets any local standards that apply, and the agri-tourism or other commercial event or activity:

(A) Must be incidental and subordinate to existing farm use on the tract;
(B) May not begin before 6 a.m. or end after 10 p.m.;
(C) May not involve more than 100 attendees or 50 vehicles;
(D) May not include the artificial amplification of music or voices before 8 a.m. or after 8 p.m.;
(E) May not require or involve the construction or use of a new permanent structure in connection with the agri-tourism or other commercial event or activity;
(F) Must be located on a tract of at least 10 acres unless the owners or residents of adjoining properties consent, in writing, to the location; and
(G) Must comply with applicable health and fire and life safety requirements.

3) In the alternative to Subsections 1) and 2), the county may authorize up to six agri-tourism or other commercial events or activities on a tract in a calendar year by a limited use permit that is personal to the applicant and is not transferred by, or transferable with, a conveyance of the tract. The agri-tourism or other commercial events or activities must meet any local standards that apply, and the agri-tourism or other commercial events or activities:

(A) Must be incidental and subordinate to existing farm use on the tract;
(B) May not, individually, exceed a duration of 72 consecutive hours;
(C) May not require that a new permanent structure be built, used or occupied in connection with the agri-tourism or other commercial events or activities;
(D) Must comply with the standards described in Sections S3.5011) and 2);
(E) May not, in combination with other agri-tourism or other commercial events or activities authorized in the area, materially alter the stability of the land use pattern in the area; and
(F) Must comply with conditions established for:
    1) The types of agri-tourism or other commercial events or activities that are authorized during each calendar year, including the number and duration of the agri-tourism or other commercial events and activities, the anticipated daily attendance and the hours of operation;
    2) The location of existing structures and the location of proposed temporary structures to be used in connection with the agri-tourism or other commercial events or activities;
    3) The location of access and egress and parking facilities to be used in connection with the agri-tourism or other commercial events or activities;
    4) Traffic management, including the projected number of vehicles and any anticipated use of public roads; and
    5) Sanitation and solid waste

6) Must comply with the requirements of S3.5158).

(G) A permit authorized by this Subsection shall be valid for two calendar years. When considering an application for renewal, the county shall ensure compliance with the provisions of Subsection 3), any local standards that apply and conditions that apply to the permit or to the agri-tourism or other commercial events or activities authorized by the permit.

4) In addition to Subsections 1) to 3), the county may authorize agri-tourism or other commercial events or activities that occur more frequently or for a longer period or that do not otherwise comply with Subsections 1) to 3) if the agri-tourism or other commercial events or activities comply with any local standards that apply and the agri-tourism or other commercial events or activities:

(A) Are incidental and subordinate to existing commercial farm use of the tract and are necessary to support the commercial farm uses or the commercial agricultural enterprises in the area;

(B) Comply with the requirements of S3.5153)(C), (D), (E), and (F);

(C) Occur on a lot or parcel that complies with the acknowledged minimum lot or parcel size; and

(D) Do not exceed 18 events or activities in a calendar year.

5) A holder of a permit authorized by a county under Subsection 4) must request review of the permit at four-year intervals. Upon receipt of a request for review, the county shall:

(A) Provide public notice and an opportunity for public comment as part of the review process; and

(B) Limit its review to events and activities authorized by the permit, conformance with conditions of approval required by the permit and the standards established by Subsection 4).

6) Temporary structures established in connection with agri-tourism or other commercial events or activities may be permitted. The temporary structures must be removed at the end of the agri-tourism or other event or activity. Alteration to the land in connection with an agri-tourism or other commercial event or activity including, but not limited to, grading, filling or paving, are not permitted.

7) The authorizations provided by Section are in addition to other authorizations that may be provided by law, except that “outdoor mass gathering” and “other gathering,” as those terms are used in ORS 197.015 (10)(d), do not include agri-tourism or other commercial events and activities.

8) Conditions of Approval. Agri-tourism and other commercial events permitted under Subsections 3 and 4 are subject to the following standards and criteria:

(A) A permit application for an agri-tourism or other commercial event or activity shall include the following:

1) A description of the type of agri-tourism or commercial events or activities that are proposed, including the number and duration of the events and activities, the anticipated daily attendance and the hours of operation and, for events not held at wineries, how the agri-tourism and other commercial events or activities will be

related to and supportive of agriculture and incidental and subordinate to the existing farm use of the tract.

2) The types and locations of all existing and proposed temporary structures, access and egress, parking facilities, sanitation and solid waste facilities to be used in connection with the agri-tourism or other commercial events or activities;

3) Authorization to allow inspection of the event premises. The applicant shall provide in writing a consent to allow law enforcement, public health, and fire control officers and code enforcement staff to come upon the premises for which the permit has been granted for the purposes of inspection and enforcement of the terms and conditions of the permit and the Exclusive Farm Use Zone and any other applicable laws or ordinances.

(B) Approval Criteria.

1) The area in which the agri-tourism or other commercial events or activities are located shall be setback at least 100 feet from the property line.

2) No more than two agri-tourism or commercial events or activities may occur in one month.

3) The maximum number of people shall not exceed 500 per calendar day.

4) Notification of agri-tourism and other commercial events or activities.

a) The property owner shall submit in writing the list of calendar days scheduled for all agri-tourism and other commercial events or activities by April 1 of the subject calendar year or within 30 days of new or renewed permits to County's Planning Department and a list of all property owners within 500 feet of the subject property, as notarized by a title company.

b) The list of calendar dates for all agri-tourism, commercial events and activities may be amended by submitting the amended list to the Department at least 72 hours prior to any change in the date of approved dates.

c) If notice pursuant to a) is not provided, the property owner shall provide notice by Registered Mail to the same list above at least 10 days prior to each agri-tourism and other commercial event or activity.

d) The notification shall include a contact person or persons for each agri-tourism and other commercial event or activity who shall be easily accessible and who shall remain on site at all times, including the person(s) contact information.

5) Hours of Operation. No agri-tourism and other commercial event or activity may begin before 7:00 a.m. or end after 10:00 p.m.

6) Overnight camping is prohibited.
7) Noise Control:
   a) All noise, including the use of a sound producing device such as, but not limited to, loud speakers and public address systems, musical instruments that are amplified or unamplified, shall be in compliance with applicable state regulations.
   b) A standard sound level meter or equivalent, in good condition, that provides a weighted sound pressure level measured by use of a metering characteristic with an "A" frequency weighting network and reported as dBA shall be available on-site at all times during agri-tourism and other commercial events or activities.
8) Transportation Management
   a) Roadways, driveway aprons, driveways and parking surfaces shall be surfaces that prevent dust, and may include paving, gravel, cinders, or bark/wood chips.
   b) Driveways extending from paved roads shall have a paved apron, requiring review and approval by the County Road Department.
   c) The parcel, lot or tract must have direct access from a public road or is accessed by an access easement or private road, whereby all underlying property owners and property owners taking access between the subject property and the public road consent in writing to the use of the road for agri-tourism and other commercial events or activities at the time of initial application.
   d) Adequate traffic control must be provided by the property owner and must include one traffic control person for each 250 persons expected or reasonably expected to be in attendance at any time. All traffic control personnel shall be certified by the State of Oregon and shall comply with the current edition of the Manual of Uniform Traffic Control Devices.
   e) Adequate off-street parking will be provided pursuant to provisions of the County Off-Street Parking requirements in Section 3.0050-3.0090.
9) Health and Safety Compliance
   a) Sanitation facilities shall include, at a minimum, portable restroom facilities and stand-alone hand washing stations.
   b) All permanent and temporary structures and facilities are subject to fire, health and life safety requirements, and shall comply with all requirements of the County Building Code Division any other applicable federal, state and local laws.

c) Compliance with the requirements of the Building Codes Division shall include meeting all building occupancy classification requirements of the State of Oregon adopted building code.

Section 3.9170. Commercial Facilities for Generating Power

1) Commercial Power Generating Facility.
   (A) Permanent features of a power generation facility shall not preclude more than:
      1. 12 acres from use as a commercial agricultural enterprise on high value farmland unless an exception is taken pursuant to ORS 197.732 and OAR chapter 660, division 4; or
      2. 20 acres from use as a commercial agricultural enterprise on land other than high-value farmland unless an exception is taken pursuant to ORS 197.732 and OAR chapter 660, division 4.
   (B) A power generation facility may include on-site and off-site facilities for temporary workforce housing for workers constructing a power generation facility. Such facilities must be removed or converted to an allowed use under OAR 660-033-0130(19) or other statute or rule when project construction is complete. Temporary workforce housing facilities not included in the initial approval may be considered through a minor amendment request. A minor amendment request shall be subject to 660-033-0130(5) and shall have no effect on the original approval.
2) Wind Power Generation Facility.
   (A) For purposes of this ordinance a wind power generation facility includes, but is not limited to, the following system components: all wind turbine towers and concrete pads, permanent meteorological towers and wind measurement devices, electrical cable collection systems connecting wind turbine towers with the relevant power substation, new or expanded private roads (whether temporary or permanent) constructed to serve the wind power generation facility, office and operation and maintenance buildings, temporary lay-down areas and all other necessary appurtenances, including but not limited to on-site and off-site facilities for temporary workforce housing for workers constructing a wind power generation facility.
      1. Temporary workforce housing described in Section S3.5151)(B) must be removed or converted to an allowed use under OAR 660-033-0130(19) or other statute or rule when project construction is complete.
      2. Temporary workforce housing facilities not included in the initial approval may be considered through a minor amendment request filed after a decision to approve a power generation facility. A minor amendment request shall be subject to 660-033-0130(5) and shall have no effect on the original approval.

(B) For wind power generation facility proposals on high-value farmland soils, as described at ORS 195.300(10), the governing body or its designate must find that all of the following are satisfied:

1. Reasonable alternatives have been considered to show that siting the wind power generation facility or component thereof on high-value farmland soils is necessary for the facility or component to function properly or if a road system or turbine string must be placed on such soils to achieve a reasonably direct route considering the following factors:
   a) Technical and engineering feasibility;
   b) Availability of existing rights of way; and
   c) The long-term environmental, economic, social and energy consequences of siting the facility or component on alternative sites, as determined under Subsection 2;
2. The long-term environmental, economic, social and energy consequences resulting from the wind power generation facility or any components thereof at the proposed site with measures designed to reduce adverse impacts are not significantly more adverse than would typically result from the same proposal being located on other agricultural lands that do not include high-value farmland soils;
3. Costs associated with any of the factors listed in Subsection 1 may be considered, but costs alone may not be the only consideration in determining that siting any component of a wind power generation facility on high-value farmland soils is necessary;
4. The owner of a wind power generation facility approved under Subsection (B) shall be responsible for restoring, as nearly as possible, to its former condition any agricultural land and associated improvements that are damaged or otherwise disturbed by the siting, maintenance, repair or reconstruction of the facility. Nothing in this Subsection shall prevent the owner of the facility from requiring a bond or other security from a contractor or otherwise imposing on a contractor the responsibility for restoration; and
5. The criteria of Subsection (C) are satisfied.

(C) For wind power generation facility proposals on arable lands, meaning lands that are cultivated or suitable for cultivation, including high-value farmland soils described at ORS 195.300(10), the governing body or its designate must find that:

1. The proposed wind power facility will not create unnecessary negative impacts on agricultural operations conducted on the subject property. Negative impacts could include, but are not limited to, the unnecessary construction of roads, dividing a field or multiple fields in such a way that creates small or isolated pieces of

property that are more difficult to farm, and placing wind farm components such as meteorological towers on lands in a manner that could disrupt common and accepted farming practices;

2. The presence of a proposed wind power facility will not result in unnecessary soil erosion or loss that could limit agricultural productivity on the subject property. This provision may be satisfied by the submittal and county approval of a soil and erosion control plan prepared by an adequately qualified individual, showing how unnecessary soil erosion will be avoided or remedied and how topsoil will be stripped, stockpiled and clearly marked. The approved plan shall be attached to the decision as a condition of approval;
3. Construction or maintenance activities will not result in unnecessary soil compaction that reduces the productivity of soil for crop production. This provision may be satisfied by the submittal and county approval of a plan prepared by an adequately qualified individual, showing how unnecessary soil compaction will be avoided or remedied in a timely manner through deep soil decompaction or other appropriate practices. The approved plan shall be attached to the decision as a condition of approval; and
4. Construction or maintenance activities will not result in the unabated introduction or spread of noxious weeds and other undesirable weeds species. This provision may be satisfied by the submittal and county approval of a weed control plan prepared by an adequately qualified individual that includes a long-term maintenance agreement. The approved plan shall be attached to the decision as a condition of approval.

(D) For wind power generation facility proposals on non-arable lands, meaning lands that are not suitable for cultivation, the requirements of Section S3.5152)(C)4 are satisfied.

(E) In the event that a wind power generation facility is proposed on a combination of arable and non-arable lands as described in Subsections (C) and (D), the approval criteria of Subsection (C) shall apply to the entire project.

3) Photovoltaic Solar Power Generation Facility. A proposal to site a photovoltaic solar power generation facility shall be subject to the following definitions and provisions:

(A) “Arable land” means land in a tract that is predominantly cultivated or, if not currently cultivated, predominantly comprised of arable soils.

(B) “Arable soils” means soils that are suitable for cultivation as determined by the governing body or its designate based on substantial evidence in the record of a local land use application, but “arable soils” does not include high-value farmland soils described at ORS 195.300(10) unless otherwise stated.

(C) "Non-arable land" means land in a tract that is predominantly not cultivated and predominantly comprised of non-arable soils.

(D) "Non-arable soils" means soils that are not suitable for cultivation. Soils with an NRCS agricultural capability class V–VIII and no history of irrigation shall be considered non-arable in all cases. The governing body or its designate may determine other soils, including soils with a past history of irrigation, to be non-arable based on substantial evidence in the record of a local land use application.

(E) "Photovoltaic solar power generation facility" includes, but is not limited to, an assembly of equipment that converts sunlight into electricity and then stores, transfers, or both, that electricity. This includes photovoltaic modules, mounting and solar tracking equipment, foundations, inverters, wiring, storage devices and other components. Photovoltaic solar power generation facilities also include electrical cable collection systems connecting the photovoltaic solar generation facility to a transmission line, all necessary grid integration equipment, new or expanded private roads constructed to serve the photovoltaic solar power generation facility, office, operation and maintenance buildings, staging areas and all other necessary appurtenances. For purposes of applying the acreage standards of this Section, a photovoltaic solar power generation facility includes all existing and proposed facilities on a single tract, as well as any existing and proposed facilities determined to be under common ownership on lands with fewer than 1320 feet of separation from the tract on which the new facility is proposed to be sited. Projects connected to the same parent company or individuals shall be considered to be in common ownership, regardless of the operating business structure. A photovoltaic solar power generation facility does not include a net metering project established consistent with ORS 757.300 and OAR chapter 860, division 39 or a Feed-in-Tariff project established consistent with ORS 757.365 and OAR chapter 860, division 84.

(F) For high-value farmland described at ORS 195.300(10), a photovoltaic solar power generation facility shall not preclude more than 12 acres from use as a commercial agricultural enterprise unless an exception is taken pursuant to ORS 197.732 and OAR chapter 660, division 4. The governing body or its designate must find that:

1. The proposed photovoltaic solar power generation facility will not create unnecessary negative impacts on agricultural operations conducted on any portion of the subject property not occupied by project components. Negative impacts could include, but are not limited to, the unnecessary construction of roads dividing a field or multiple fields in such a way that creates small or isolated pieces of property that are more difficult to farm, and placing photovoltaic solar power generation facility project components on lands in a manner that could disrupt common and accepted farming practices;

2. The presence of a photovoltaic solar power generation facility will not result in unnecessary soil erosion or loss that could limit agricultural productivity on the subject property. This provision may be satisfied by the submittal and county approval of a soil and erosion control plan prepared by an adequately qualified individual, showing how unnecessary soil erosion will be avoided or remedied and how topsoil will be stripped, stockpiled and clearly marked. The approved plan shall be attached to the decision as a condition of approval;
3. Construction or maintenance activities will not result in unnecessary soil compaction that reduces the productivity of soil for crop production. This provision may be satisfied by the submittal and county approval of a plan prepared by an adequately qualified individual, showing how unnecessary soil compaction will be avoided or remedied in a timely manner through deep soil decompaction or other appropriate practices. The approved plan shall be attached to the decision as a condition of approval;
4. Construction or maintenance activities will not result in the unabated introduction or spread of noxious weeds and other undesirable weed species. This provision may be satisfied by the submittal and county approval of a weed control plan prepared by an adequately qualified individual that includes a long-term maintenance agreement. The approved plan shall be attached to the decision as a condition of approval;
5. The project is not located on high-value farmland soils unless it can be demonstrated that:
    a) Non high-value farmland soils are not available on the subject tract;
    b) Siting the project on non-high-value farmland soils present on the subject tract would significantly reduce the project's ability to operate successfully; or
    c) The proposed site is better suited to allow continuation of an existing commercial farm or ranching operation on the subject tract than other possible sites also located on the subject tract, including those comprised of non-high-value farmland soils; and
6. A study area consisting of lands zoned for exclusive farm use located within one mile measured from the center of the proposed project shall be established and:
    a) If fewer than 48 acres of photovoltaic solar power generation facilities have been constructed or received land use approvals and obtained building permits within the study area, no further action is necessary.
    b) When at least 48 acres of photovoltaic solar power

generation have been constructed or received land use approvals and obtained building permits, either as a single project or as multiple facilities within the study area, the local government or its designate must find that the photovoltaic solar energy generation facility will not materially alter the stability of the overall land use pattern of the area. The stability of the land use pattern will be materially altered if the overall effect of existing and potential photovoltaic solar energy generation facilities will make it more difficult for the existing farms and ranches in the area to continue operation due to diminished opportunities to expand, purchase or lease farmland or acquire water rights, or will reduce the number of tracts or acreage in farm use in a manner that will destabilize the overall character of the study area.

(G) For arable lands, a photovoltaic solar power generation facility shall not preclude more than 20 acres from use as a commercial agricultural enterprise unless an exception is taken pursuant to ORS 197.732 and OAR chapter 660, division 4. The governing body or its designate must find that:

1. The project is not located on high-value farmland soils or arable soils unless it can be demonstrated that:
   a) Non-arable soils are not available on the subject tract;
   b) Siting the project on non-arable soils present on the subject tract would significantly reduce the project's ability to operate successfully; or
   c) The proposed site is better suited to allow continuation of an existing commercial farm or ranching operation on the subject tract than other possible sites also located on the subject tract, including those comprised of non-arable soils;
2. No more than 12 acres of the project will be sited on high-value farmland soils described at ORS 195.300(10) unless an exception is taken pursuant to 197.732 and OAR chapter 660, division 4;
3. A study area consisting of lands zoned for exclusive farm use located within one mile measured from the center of the proposed project shall be established and:
   a) If fewer than 80 acres of photovoltaic solar power generation facilities have been constructed or received land use approvals and obtained building permits within the study area no further action is necessary.
   b) When at least 80 acres of photovoltaic solar power generation have been constructed or received land use approvals and obtained building permits, either as a single project or as multiple facilities, within the study area the local government or its designate must find that the photovoltaic

solar energy generation facility will not materially alter the stability of the overall land use pattern of the area. The stability of the land use pattern will be materially altered if the overall effect of existing and potential photovoltaic solar energy generation facilities will make it more difficult for the existing farms and ranches in the area to continue operation due to diminished opportunities to expand, purchase or lease farmland, acquire water rights or diminish the number of tracts or acreage in farm use in a manner that will destabilize the overall character of the study area; and

4. The requirements of Sections S3.5153)(F)1, 2, 3, and 4 are satisfied.

(H) For non-arable lands, a photovoltaic solar power generation facility shall not preclude more than 320 acres from use as a commercial agricultural enterprise unless an exception is taken pursuant to ORS 197.732 and OAR chapter 660, division 4. The governing body or its designate must find that:

1. The project is not located on high-value farmland soils or arable soils unless it can be demonstrated that:
   a) Siting the project on non-arable soils present on the subject tract would significantly reduce the project's ability to operate successfully; or
   b) The proposed site is better suited to allow continuation of an existing commercial farm or ranching operation on the subject tract as compared to other possible sites also located on the subject tract, including sites that are comprised of non-arable soils;
2. No more than 12 acres of the project will be sited on high-value farmland soils described at ORS 195.300(10);
3. No more than 20 acres of the project will be sited on arable soils unless an exception is taken pursuant to ORS 197.732 and OAR chapter 660, division 4;
4. The requirements of Section S3.5153)(F)4 are satisfied;
5. If a photovoltaic solar power generation facility is proposed to be developed on lands that contain a Goal 5 resource protected under the county's comprehensive plan, and the plan does not address conflicts between energy facility development and the resource, the applicant and the county, together with any state or federal agency responsible for protecting the resource or habitat supporting the resource, will cooperatively develop a specific resource management plan to mitigate potential development conflicts. If there is no program present to protect the listed Goal 5 resource(s) present in the local comprehensive plan or implementing ordinances and the applicant and the appropriate resource

management agency(ies) cannot successfully agree on a cooperative resource management plan, the county is responsible for determining appropriate mitigation measures; and

6. If a proposed photovoltaic solar power generation facility is located on lands where the potential exists for adverse effects to state or federal special status species (threatened, endangered, candidate, or sensitive), or to wildlife species of concern identified and mapped by the Oregon Department of Fish and Wildlife (including big game winter range and migration corridors, golden eagle and prairie falcon nest sites, and pigeon springs), the applicant shall conduct a site-specific assessment of the subject property in consultation with all appropriate state, federal, and tribal wildlife management agencies. A professional biologist shall conduct the site-specific assessment by using methodologies accepted by the appropriate wildlife management agency and shall determine whether adverse effects to special status species or wildlife species of concern are anticipated. Based on the results of the biologist's report, the site shall be designed to avoid adverse effects to state or federal special status species or to wildlife species of concern as described above. If the applicant's site-specific assessment shows that adverse effects cannot be avoided, the applicant and the appropriate wildlife management agency will cooperatively develop an agreement for project-specific mitigation to offset the potential adverse effects of the facility. Where the applicant and the resource management agency cannot agree on what mitigation will be carried out, the county is responsible for determining appropriate mitigation, if any, required for the facility.

7. The provisions of Section S3.5153)(H)6 are repealed on January 1, 2022.

(I) The project owner shall sign and record in the deed records for the county a document binding the project owner and the project owner's successors in interest, prohibiting them from pursuing a claim for relief or cause of action alleging injury from farming or forest practices as defined in ORS 30.930(2) and (4).

(J) Nothing in this Section shall prevent the county from requiring a bond or other security from a developer or otherwise imposing on a developer the responsibility for retiring the photovoltaic solar power generation facility.

SECTION 3.9180. FOREST ZONE STANDARDS. [ORD. 18-02]

Section 3.9190. Residential Uses

1) A large tract forest dwelling authorized under ORS 215.740 may be allowed on land zoned for forest use if it is sited on a tract that does not include a dwelling and complies with other provisions of law, including the following**:**

(A) The tract is at least 160 contiguous acres or 200 acres in one ownership that are not contiguous but are in the same county or adjacent counties and zoned for forest use. A deed restriction shall be filed pursuant to subsection (C) for all tracts that are used to meet the acreage requirements of this subsection.

(B) A tract shall not be considered to consist of less than 160 acres because it is crossed by a public road or a waterway.

(C) Where one or more lots or parcels are required to meet minimum acreage requirements:

1. The applicant shall provide evidence that the covenants, conditions and restrictions form adopted as "Exhibit A" in OAR chapter 660, division 6 has been recorded with the county clerk of the county or counties where the property subject to the covenants, conditions and restrictions is located.
2. The covenants, conditions and restrictions are irrevocable, unless a statement of release is signed by an authorized representative of the county or counties where the property subject to the covenants, conditions and restrictions is located.

2) Lot of Record Dwelling**.**

(A) The lot or parcel on which the dwelling will be sited was lawfully created and was acquired and owned continuously by the present owner as defined in paragraph (D):

1. Since prior to January 1, 1985; or
2. By devise or by intestate succession from a person who acquired and had owned continuously the lot or parcel since prior to January 1, 1985.

(B) The tract on which the dwelling will be sited does not include a dwelling;

(C) The lot or parcel on which the dwelling will be sited was part of a tract on November 4, 1993, no dwelling exists on another lot or parcel that was part of that tract.

(D) For purposes of this subsection, “owner" includes the wife, husband, son, daughter, mother, father, brother, brother-in-law, sister, sister-in-law, son-in-law, daughter-in-law, mother-in-law, father-in-law, aunt, uncle, niece, nephew, stepparent, stepchild, grandparent or grandchild of the owner or a business entity owned by any one or combination of these family members.

(E) The dwelling must be located on a tract that is composed of soils not capable of producing 5,000 cubic feet per year of commercial tree species and is located within 1,500 feet of a public road as defined under ORS 368.001 that provides or will provide access to the subject tract. The road shall be maintained and either paved or surfaced with rock and shall not be:

1. A United States Bureau of Land Management road; or
2. A United States Forest Service road unless the road is paved to a

minimum width of 18 feet, there is at least one defined lane in each direction and a maintenance agreement exists between the United States Forest Service and landowners adjacent to the road, a local government or a state agency.

(F) When the lot or parcel on which the dwelling will be sited lies within an area designated in an acknowledged comprehensive plan as habitat of big game, the siting of the dwelling shall be consistent with the limitations on density upon which the acknowledged comprehensive plan and land use regulations intended to protect the habitat are based; and

(G) When the lot or parcel on which the dwelling will be sited is part of a tract, the remaining portions of the tract shall be consolidated into a single lot or parcel when the dwelling is allowed.

3) A single family "template" dwelling authorized under ORS 215.750 on a lot or parcel located within a forest zone if the lot or parcel is predominantly composed of soils that are:

(A) Capable of producing zero to 49 cubic feet per acre per year of wood fiber if:

1. All or part of at least three other lots or parcels that existed on January 1, 1993, are within a 160 acre square centered on the center of the subject tract; and
2. At least three dwellings existed on January 1, 1993 and continue to exist on the other lots or parcels.

(B) Capable of producing 50 to 85 cubic feet per acre per year of wood fiber if:

1. All or part of at least seven other lots or parcels that existed on January 1, 1993, are within a 160 acre square centered on the center of the subject tract; and
2. At least three dwellings existed on January 1, 1993 and continue to exist on the other lots or parcels.

(C) Capable of producing more than 85 cubic feet per acre per year of wood fiber if:

1. All or part of at least 11 other lots or parcels that existed on January 1, 1993, are within a 160 acre square centered on the center of the subject tract; and
2. At least three dwellings existed on January 1, 1993 and continue to exist on the other lots or parcels.

(D) Lots or parcels within urban growth boundaries shall not be used to satisfy eligibility requirements.

(E) A dwelling is in the 160-acre template if any part of the dwelling is in the 160-acre template.

(F) Except as provided by paragraph (G), if the subject tract abuts a road that existed on January 1, 1993, the measurement may be made by creating a 160 acre rectangle that is one mile long and 1/4 mile wide centered on the center of the subject tract and that is to the maximum extent possible, aligned with the road.

(G) The following applies where a tract 60 acres or larger abuts a road or perennial stream.

1. The measurement shall be made in accordance with paragraph (F). However, one of the three required dwellings shall be on the same side of the road or stream as the tract, and:
   a) Be located within a 160-acre rectangle that is one mile long and one-quarter mile wide centered on the center of the subject tract and that is, to the maximum extent possible aligned with the road or stream; or
   b) Be within one-quarter mile from the edge of the subject tract but not outside the length of the 160 acre rectangle, and on the same side of the road or stream as the tract.
2. If a road crosses the tract on which the dwelling will be located, at least one of the three required dwellings shall be on the same side of the road as the proposed dwelling.

(H) A proposed "template" dwelling under this ordinance is not allowed:

1. If it is prohibited by or will not comply with the requirements of an acknowledged comprehensive plan, acknowledged land use regulations, or other provisions of law;
2. Unless it complies with the requirements of Sections 3.9240 and 3.9250;
3. Unless no dwellings are allowed on other lots or parcels that make up the tract and deed restrictions established under Sections 1.1)(C) or 4.3500(4) for the other lots or parcels that make up the tract are met; or
4. If the tract on which the dwelling will be sited includes a dwelling.

(I) Where other lots or parcels that make up a tract in Section 3.9190(3)(H):

1) The applicant shall provide evidence that the covenants, conditions, and restrictions form adopted as "Exhibit A" in OAR Chapter 660, Division 6 has been recorded with the county clerk of the counties where the property subject to the covenants, conditions, and restrictions is located.
2) The covenants, conditions, and restrictions are irrevocable, unless a statement of release is signed by an authorized representative of the county or counties where the property subject to the covenants, conditions, and restrictions is located.

4) Alteration, restoration or replacement of a lawfully established dwelling, where Subsections (A) or (B) apply:

(A) Alteration or restoration of a lawfully established dwelling that:

1. Has intact exterior walls and roof structures;
2. Has indoor plumbing consisting of a kitchen sink, toilet and bathing facilities connected to a sanitary waste disposal system;
3. Has interior wiring for interior lights; and
4. Has a heating system.

(B) In the case of replacement, is removed, demolished or converted to an allowable nonresidential use within three months of the completion of the replacement dwelling.

5) A temporary hardship dwelling is subject to the following:

(A) One manufactured dwelling, or recreational vehicle, or the temporary residential use of an existing building may be allowed in conjunction with an existing dwelling as a temporary use for the term of the hardship suffered by the existing resident or relative, subject to the following:

1. The manufactured dwelling shall use the same subsurface sewage disposal system used by the existing dwelling, if that disposal system is adequate to accommodate the additional dwelling. If the manufactured home will use a public sanitary sewer system, such condition will not be required;
2. The county shall review the permit authorizing such manufactured homes every two years; and
3. Within three months of the end of the hardship, the manufactured dwelling or recreational vehicle shall be removed or demolished or, in the case of an existing building, the building shall be removed, demolished or returned to an allowed nonresidential use.

(B) A temporary residence approved under this section is not eligible for replacement under Section 4.3500(18). Department of Environmental Quality review and removal requirements also apply.

(C) As used in this section “hardship” means a medical hardship or hardship for the care of an aged or infirm person or persons.

6) For single-family dwellings, the landowner shall sign and record in the deed records for the county a document binding the landowner, and the landowner's successors in interest, prohibiting them from pursuing a claim for relief or cause of action alleging injury from farming or forest practices for which no action or claim is allowed under ORS 30.936 or 30.937.

Section 3.9200. Commercial Uses

1) A home occupation shall be subject to the requirements of Section 3.8000 and:

(A) Shall be operated by a resident or employee of a resident of the property on which the business is located;

(B) Shall employ on the site no more than five full-time or part-time persons at any given time;

(C) Shall be operated substantially in:

1. The dwelling; or
2. Other buildings normally associated with uses permitted in the zone in which the property is located, except that such other buildings may not be utilized as bed and breakfast facilities or rental units unless they are legal residences; and

(A) Shall not unreasonably interfere with other uses permitted in the zone in

which the property is located.

(B) The home occupation shall be accessory to an existing, permanent dwelling on the same parcel.

(C) No materials or mechanical equipment shall be used which will be detrimental to the residential use of the property or adjoining residences because of vibration, noise, dust, smoke, odor, interference with radio or television reception, or other factors.

(D) All off-street parking must be provided on the subject parcel where the home occupation is operated.

1. Employees must use an approved off-street parking area.
2. Customers visiting the home occupation must use an approved off-street parking area. No more than 5 vehicles from customers/visitors of the home occupation can be present at any given time on the subject parcel.

(E) Retail sales shall be limited or accessory to a service.

(F) Prohibited Home Occupations

1. Retail sales or professional services, other than by appointment only.
2. Auto or vehicle oriented activities (repair, painting, detailing, wrecking, transportation services, or similar activities).

(G) Permitting.

1. Home occupations shall be subject to a conditional use permit process, pursuant to Section 2.4000 and Section 3.8000, unless all of the requirements of 2 can be met.
2. An in-home commercial activity is not considered a home occupation and does not require a land use permit where all of the following criteria can be met. The in-home activity:
   a) Meets the criteria under Section 3.9200(5) (A) and (C).
   b) Is conducted within a dwelling only by residents of the dwelling.
   c) Does not occupy more than 25 percent of the combined floor area of the dwelling including attached garage and one accessory structure.
   d) Does not serve clients or customers on-site.
   e) Does not include the on-site advertisement, display or sale of stock in trade, other than vehicle or trailer signage.
   f) Does not include the outside storage of materials, equipment or products.

2. A permanent facility for the primary processing of forest products may be permitted, where the facility is:

(A) Located in a building or buildings that do not exceed 10,000 square feet in total floor area; or

(B) Located in an outdoor area that 4oes not exceed one acre excluding laydown and storage yards; or

(C) Located in a combination of indoor and outdoor areas described in Subsections (A) and (B); and

(D) Adequately separated from the surrounding properties to reasonably mitigate noise, odor, and other impacts generated by the facility that adversely affect forest management and other existing uses, as determined by the governing body.

3. Private seasonal accommodations for fee hunting operations are subject to the following requirements:

(A) Accommodations are limited to no more than 15 guest rooms as that term is defined in the Oregon Structural Specialty Code;

(B) Only minor incidental and accessory retail sales are permitted; and

(C) Accommodations are occupied temporarily for the purpose of hunting during either or both game bird or big game hunting seasons authorized by the Oregon Fish and Wildlife Commission.

4. Private accommodations for fishing occupied on a temporary basis are subject to the following requirements:

(A) Accommodations limited to no more than 15 guest rooms as that term is defined in the Oregon Structural Specialty Code;

(B) Only minor incidental and accessory retail sales are permitted;

(C) Accommodations occupied temporarily for the purpose of fishing during fishing seasons authorized by the Oregon Fish and Wildlife Commission; and

(D) Accommodations must be located within one-quarter mile of fish-bearing Class I waters.

Section 3.9210. Utility, Power Generation, Solid Waste Uses

1) A Commercial Utility Facility for the purpose of generating power shall not preclude more than 10 acres from use as a commercial forest operation.

2) Solid waste disposal facilities shall meet the performance and permitting requirements of the Department of Environmental Quality under ORS 459.245, the requirements of Section 3.9230 and shall comply with the following requirements.

(A) The facility shall be designed to minimize conflicts with existing and permitted uses allowed under plan designations for adjacent parcels as outlined in policies of the Comprehensive Plan.

(B) The facility must be of a size and design to minimize noise or other detrimental effects when located adjacent to farm, forest and grazing dwellings(s) or a residential zone.

(C) The facility shall be fenced when the site is located adjacent to dwelling(s) or a residential zone and landscaping, buffering and/or screening shall be provided.

(D) The facility does not constitute an unnecessary fire hazard. If located in a forested area, the county shall condition approval to ensure that minimum fire safety measures will be taken, which may include but are not limited to

the following:

1. The area surrounding the facility is kept free from litter and debris.
2. Fencing will be installed around the facility, if deemed appropriate to protect adjacent farm crops or timber stand.
3. If the proposed facility is located in a forested area, construction materials shall be fire resistant or treated with a fire retardant substance and the applicant will be required to remove forest fuels within [30 feet] of structures.

(E) The facility shall adequately protect fish and wildlife resources by meeting minimum Oregon State Department of Forestry regulations.

(F) Access roads or easements for the facility shall be improved to the county's Transportation System Plan standards and comply with grades recommended by the Public Works Director.

(G) Road construction for the facility must be consistent with the intent and purposes set forth in the Oregon Forest Practices Act to minimize soil disturbance and help maintain water quality.

(H) Hours of operation for the facility shall be limited to 8 am – 7 pm.

(I) Comply with other conditions deemed necessary.

Section 3.9220. Public and Quasi-public Uses

1) Storage structures for emergency supplies are subject to the following requirements:

(A) Areas within an urban growth boundary cannot reasonably accommodate the structures;

(B) The structures are located outside tsunami inundation zones and consistent with evacuation maps prepared by Department of Geology and Mineral Industries (DOGAMI) or the local jurisdiction;

(C) Sites where the structures could be co-located with an existing use approved under this subsection are given preference for consideration;

(D) The structures are of a number and size no greater than necessary to accommodate the anticipated emergency needs of the population to be served;

(E) The structures are managed by a local government entity for the single purpose of providing for the temporary emergency support needs of the public; and

(F) Written notification has been provided to the County Office of Emergency Management of the application for the storage structures.

2) Public parks may include:

(A) All uses allowed under Statewide Planning Goal 4;

(B) The following uses, if authorized in a local or park master plan that is adopted as part of the local comprehensive plan, or if authorized in a state park master plan that is adopted by OPRD:

1. Campground areas: recreational vehicle sites; tent sites; camper cabins; yurts; teepees; covered wagons; group shelters; campfire

program areas; camp stores;

2. Day use areas: picnic shelters, barbecue areas, swimming areas (not swimming pools), open play fields, play structures;
3. Recreational trails: walking, hiking, biking, horse, or motorized off-road vehicle trails; trail staging areas;
4. Boating and fishing facilities: launch ramps and landings, docks, moorage facilities, small boat storage, boating fuel stations, fish cleaning stations, boat sewage pumpout stations;
5. Amenities related to park use intended only for park visitors and employees: laundry facilities; recreation shops; snack shops not exceeding 1500 square feet of floor area;
6. Support facilities serving only the park lands wherein the facility is located: water supply facilities, sewage collection and treatment facilities, storm water management facilities, electrical and communication facilities, restrooms and showers, recycling and trash collection facilities, registration buildings, roads and bridges, parking areas and walkways;
7. Park Maintenance and Management Facilities located within a park: maintenance shops and yards, fuel stations for park vehicles, storage for park equipment and supplies, administrative offices, staff lodging; and
8. Natural and cultural resource interpretative, educational and informational facilities in state parks: interpretative centers, information/orientation centers, self-supporting interpretative and informational kiosks, natural history or cultural resource museums, natural history or cultural educational facilities, reconstructed historic structures for cultural resource interpretation, retail stores not exceeding 1500 square feet for sale of books and other materials that support park resource interpretation and education.

(C) Visitor lodging and retreat facilities if authorized in a state park master plan that is adopted by OPRD: historic lodges, houses or inns and the following associated uses in a state park retreat area only:

1. Meeting halls not exceeding 2000 square feet of floor area;
2. Dining halls (not restaurants).

3) Private Campgrounds and Campsites.

(A) Campgrounds in private parks may be permitted, subject to the following:

1. Except on a lot or parcel contiguous to a lake or reservoir, campgrounds shall not be allowed within three miles of an urban growth boundary unless an exception is approved pursuant to ORS 197.732 and OAR chapter 660, division 4.
2. A campground shall be designed and integrated into the rural agricultural and forest environment in a manner that protects the natural amenities of the site and provides buffers of existing native trees and vegetation or other natural features between campsites.

3. Campgrounds authorized by this rule shall not include intensively developed recreational uses such as swimming pools, tennis courts, retail stores or gas stations.
4. Overnight temporary use in the same campground by a camper or camper's vehicle shall not exceed a total of 30 days during any consecutive six-month period.

(B) Campsites within campgrounds meeting the requirements of Section 3.9220(3)(A) and permitted pursuant to Section 3.9230 must comply with the following:

1. Allowed uses include tent, travel trailer or recreational vehicle; yurts are also allowed uses, subject to Section 3.9220(B)(3).
2. Separate sewer, water or electric service hook-ups shall not be provided to individual camp sites except that electrical service may be provided to yurts.
3. No more than one-third or a maximum of 10 campsites, whichever is smaller, may include a yurt. The yurt shall be located on the ground or on a wood floor with no permanent foundation.

Section 3.9230. Conditional Use Review Criteria

A use authorized in a forest zone by Sections 4.3400 and 4.3500 may be allowed provided the following requirements or their equivalent are met. These requirements are designed to make the use compatible with forest operations and agriculture and to conserve values found on forest lands.

1) The proposed use will not force a significant change in, or significantly increase the cost of, accepted farming or forest practices on agriculture or forest lands.
2) The proposed use will not significantly increase fire hazard or significantly increase fire suppression costs or significantly increase risks to fire suppression personnel.
3) A written statement recorded with the deed or written contract with the county or its equivalent is obtained from the land owner that recognizes the rights of adjacent and nearby land owners to conduct forest operations consistent with the Forest Practices Act and Rules for uses authorized in OAR 660-006-0025 Subsection 5(c).
4) The proposed use will be compatible with vicinity uses, and satisfies all relevant requirements of this ordinance and the following general criteria:
   (A) The use is consistent with those goals and policies of the Comprehensive Plan which apply to the proposed use;
   (B) The parcel is suitable for the proposed use considering its size, shape, location, topography, existence of improvements and natural features;
   (C) The proposed use will not alter the character of the surrounding area in a manner which substantially limits, impairs or prevents the use of surrounding properties for the permitted uses listed in the underlying zoning district;

(D) The proposed use is appropriate, considering the adequacy of public facilities and services existing or planned for the area affected by the use; and

(E) The use is or can be made compatible with existing uses and other allowable uses in the area.

Section 3.9240. Siting Standards for Dwellings and Structures

The following siting criteria or their equivalent shall apply to all new dwellings and structures in forest zones. These criteria are designed to make such uses compatible with forest operations, to minimize wildfire hazards and risks and to conserve values found on forest lands. A governing body shall consider the criteria in this section together with the requirements of Section 3.9250 to identify the building site:

1) Dwellings and structures shall be sited on the parcel so that:
   (A) They have the least impact on nearby or adjoining forest or agricultural lands;
   (B) The siting ensures that adverse impacts on forest operations and accepted farming practices on the tract will be minimized;
   (C) The amount of forest lands used to site access roads, service corridors, the dwelling and structures is minimized; and
   (D) The risks associated with wildfire are minimized.
2) Siting criteria satisfying Subsection 1) may include setbacks from adjoining properties, clustering near or among existing structures, siting close to existing roads and siting on that portion of the parcel least suited for growing trees.
3) The applicant shall provide evidence to the governing body that the domestic water supply is from a source authorized in accordance with the Water Resources Department's administrative rules for the appropriation of ground water or surface water and not from a Class II stream as defined in the Forest Practices rules (OAR chapter 629). For purposes of this section, evidence of a domestic water supply means:
   (A) Verification from a water purveyor that the use described in the application will be served by the purveyor under the purveyor's rights to appropriate water;
   (B) A water use permit issued by the Water Resources Department for the use described in the application; or
   (C) Verification from the Water Resources Department that a water use permit is not required for the use described in the application. If the proposed water supply is from a well and is exempt from permitting requirements under ORS 537.545, the applicant shall submit the well constructor's report to the county upon completion of the well.
4) As a condition of approval, if road access to the dwelling is by a road owned and maintained by a private party or by the Oregon Department of Forestry, the U.S. Bureau of Land Management, or the U.S. Forest Service, then the applicant shall provide proof of a long-term road access use permit or agreement. The road use

permit may require the applicant to agree to accept responsibility for road maintenance.

5) Approval of a dwelling shall be subject to the following requirements:
   (A) Approval of a dwelling requires the owner of the tract to plant a sufficient number of trees on the tract to demonstrate that the tract is reasonably expected to meet Department of Forestry stocking requirements at the time specified in department of Forestry administrative rules;
   (B) The planning department shall notify the county assessor of the above condition at the time the dwelling is approved;
   (C) Stocking survey report:
      1. If the lot or parcel is more than 10 acres in western Oregon or more than 30 acres in eastern Oregon, the property owner shall submit a stocking survey report to the county assessor and the assessor will verify that the minimum stocking requirements have been met by the time required by Department of Forestry rules;
      2. Upon notification by the assessor the Department of Forestry will determine whether the tract meets minimum stocking requirements of the Forest Practices Act. If that department determines that the tract does not meet those requirements, that department will notify the owner and the assessor that the land is not being managed as forest land. The assessor will then remove the forest land designation pursuant to ORS 321.359 and impose the additional tax; and
   (D) The county governing body or its designate shall require as a condition of approval of a single-family dwelling under ORS 215.213, 215.383 or 215.284 or otherwise in a farm or forest zone, that the landowner for the dwelling sign and record in the deed records for the county a document binding the landowner, and the landowner's successors in interest, prohibiting them from pursuing a claim for relief or cause of action alleging injury from farming or forest practices for which no action or claim is allowed under ORS 30.936 or 30.937. A governing body shall consider the criteria in this section together with the requirements of Section 3.9250 to identify the building site.

Section 3.9250. Fire Protection Standards for Dwellings and Structures
The following fire-siting standards or their equivalent shall apply to all new dwelling or structures in a forest zone:

1) The dwelling shall be located upon a parcel within a fire protection district or shall be provided with residential fire protection by contract. If the dwelling is not within a fire protection district, the applicant shall provide evidence that the applicant has asked to be included within the nearest such district. If the governing body determines that inclusion within a fire protection district or contracting for residential fire protection is impracticable, the governing body may provide an

alternative means for protecting the dwelling from fire hazards that shall comply with the following:

(A) The means selected may include a fire sprinkling system, onsite equipment and water storage or other methods that are reasonable, given the site conditions;

(B) If a water supply is required for fire protection, it shall be a swimming pool, pond, lake, or similar body of water that at all times contains at least 4,000 gallons or a stream that has a continuous year-round flow of at least one cubic foot per second;

(C) The applicant shall provide verification from the Water Resources Department that any permits or registrations required for water diversion or storage have been obtained or that permits or registrations are not required for the use; and

(D) Road access shall be provided to within 15 feet of the water's edge for firefighting pumping units. The road access shall accommodate the turnaround of firefighting equipment during the fire season. Permanent signs shall be posted along the access route to indicate the location of the emergency water source.

2) Road access to the dwelling shall meet road design standards described in OAR 660-006-0040.

3) The owners of the dwellings and structures shall maintain a primary fuel-free break area surrounding all structures and clear and maintain a secondary fuel-free break area on land surrounding the dwelling that is owned or controlled by the owner in accordance with the provisions in "Recommended Fire Siting Standards for Dwellings and Structures and Fire Safety Design Standards for Roads" dated March 1, 1991, published by the Oregon Department of Forestry; and shall also *demonstrate compliance with Table 3.1*.

4) The dwelling shall have a fire-retardant roof.

5) The dwelling shall not be sited on a slope of greater than 40 percent.

6) If the dwelling has a chimney or chimneys, each chimney shall have a spark arrester.

Table 3.1. Minimum Primary Safety Zone.

Slope	Feet of Primary Safety Zone	Feet of Additional Primary Safety Zone Down Slope
0%	30	0
10%	30	50
20%	30	75
25%	30	100
40%	30	150

Figure 8. Example of Safety Zone Shape.

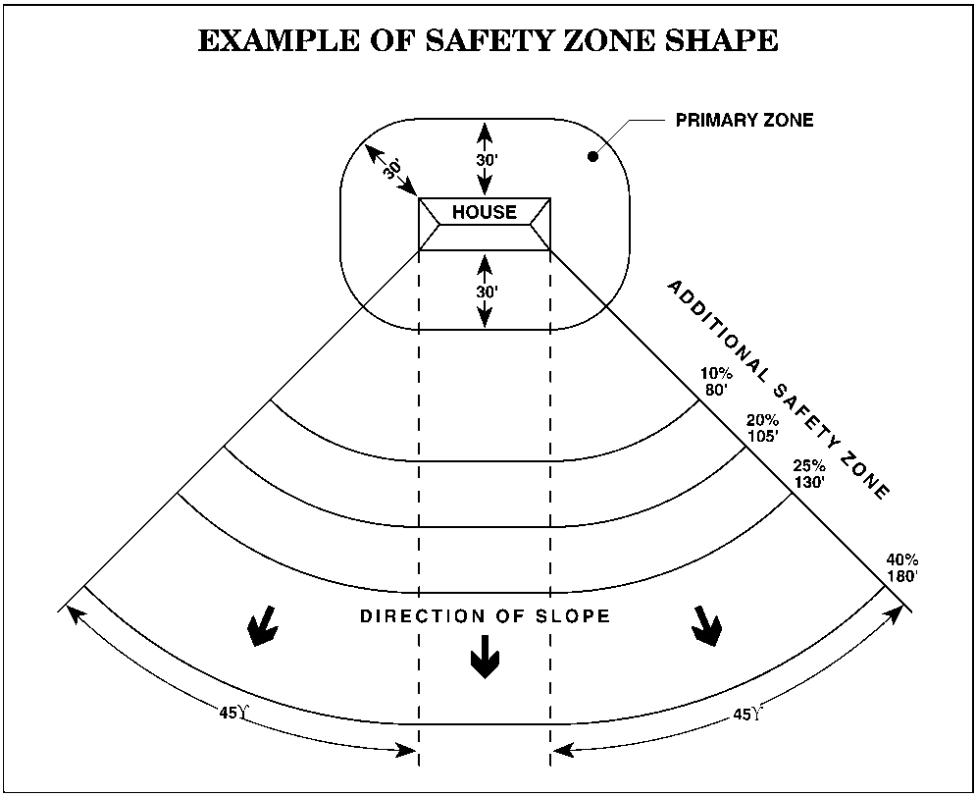

SECTION 3.9300. YOUTH CAMPS

1) The purpose of this section is to provide for the establishment of a youth camp that is generally self-contained and located on a parcel suitable to limit potential impacts on nearby and adjacent land and to be compatible with the forest environment.

2) Changes to or expansions of youth camps established prior to the effective date of this section shall be subject to the provisions of ORS 215.130.

3) An application for a proposed youth camp shall comply with the following:

   (A) The number of overnight camp participants that may be accommodated shall be determined by the governing body, or its designate, based on the size, topography, geographic features and any other characteristics of the proposed site for the youth camp. Except as provided by Section 3.9300(3)(B) a youth camp shall not provide overnight accommodations for more than 350 youth camp participants, including staff.

   (B) The governing body, or its designated may allow up to eight (8) nights during the calendar year when the number of overnight participants may exceed the total number of overnight participants allowed undersection 3.9300(3)(A).

   (C) Overnight stays for adult programs primarily for individuals over 21 years of age, not including staff, shall not exceed 10 percent of the total camper

nights offered by the youth camp.

(D) The use will not force a significant change in, or significantly increase the cost of, accepted farming or forest practices on agriculture or forest lands.

(E) A campground as described in Section 4.3500(20) shall not be established in conjunction with a youth camp.

(F) A youth camp shall not be allowed in conjunction with an existing golf course.

(G) A youth camp shall not interfere with the exercise of legally established water rights on adjacent properties.

4) The youth camp shall be located on a lawful parcel that is:

A. Suitable to provide a forested setting needed to ensure a primarily outdoor experience without depending upon the use or natural characteristics of adjacent and nearby public and private land. This determination shall be based on the size, topography, geographic features and any other characteristics of the proposed site for the youth camp, as well as, the number of overnight participants and type and number of proposed facilities. A youth camp shall be located on a parcel of at least 40 acres.

B. Suitable to provide a protective buffer to separate the visual and audible aspects of youth camp activities from other nearby and adjacent lands. The buffers shall consist of forest vegetation, topographic or other natural features as well as structural setbacks from adjacent public and private lands, roads, and riparian areas. The structural setback from roads and adjacent public and private property shall be 250 feet unless the governing body, or its designate sets a different setback based upon the following criteria that may be applied on a case-by-case basis:

1) The proposed setback will prevent conflicts with commercial resource management practices;

2) The proposed setback will prevent a significant increase in safety hazards associated with vehicular traffic; and

3) The proposed setback will provide an appropriate buffer from visual and audible aspects of youth camp activities from other nearby and adjacent resource lands.

C. Suitable to provide for the establishment of sewage disposal facilities without requiring a sewer system as defined in OAR 660-011-0060(1)(f). Prior to granting final approval, the governing body or its designate shall verify that a proposed youth camp will not result in the need for a sewer system.

5) A youth camp may provide the following facilities:

A. Recreational facilities limited to passive improvements, such as open areas suitable for ball fields, volleyball courts, soccer fields, archery or shooting ranges, hiking and biking trails, horseback riding or swimming that can be provided in conjunction with the site's natural environment. Intensively developed facilities such as tennis courts, gymnasiums, and golf courses shall not be allowed. One swimming pool may be allowed if

no lake or other water feature suitable for aquatic recreation is located on the subject property or immediately available for youth camp use.

B. Primary cooking and eating facilities shall be included in a single building. Except in sleeping quarters, the governing body, or its designate, may allow secondary cooking and eating facilities in one or more buildings designed to accommodate other youth camp activities. Food services shall be limited to the operation of the youth camp and shall be provided only for youth camp participants. The sale of individual meals may be offered only to family members or guardians of youth camp participants.

C. Bathing and laundry facilities except that they shall not be provided in the same building as sleeping quarters.

D. Up to three camp activity buildings, not including primary cooking and eating facilities.

E. Sleeping quarters including cabins, tents or other structures. Sleeping quarters may include toilets, but, except for the caretaker's dwelling, shall not include kitchen facilities. Sleeping quarters shall be provided only for youth camp participants and shall not be offered as overnight accommodations for persons not participating in youth camp activities or as individual rentals.

F. Covered areas that are not fully enclosed.

G. Administrative, maintenance and storage buildings; permanent structure for administrative services, first aid, equipment and supply storage, and for use as an infirmary if necessary or requested by the applicant.

H. An infirmary may provide sleeping quarters for the medical care provider (e.g. Doctor, Registered Nurse, Emergency Medical Technician, etc.).

I. A caretaker's residence may be established in conjunction with a youth camp prior to or after June 14, 2000, if no other dwelling exists on the subject property.

6) A proposed youth camp shall comply with the following fire safety requirements:

A. The fire siting standards in Section 3.9250.

B. A fire safety protection plan shall be developed for each youth camp that includes the following:

1) Fire prevention measures;
2) On site pre-suppression and suppression measures; and
3) The establishment and maintenance of fire safe area(s) in which camp participants can gather in the event of a fire.

C. Except as determined under paragraph (6)(D), a youth camp's on-site fire suppression capability shall include:

1) A 1000 gallon mobile water supply that can access all areas of the camp;
2) A 30 gallon-per-minute water pump and an adequate amount of hose and nozzles;
3) A sufficient number of fire-fighting hand tools; and
4) Trained personnel capable of operating all fire suppression

equipment at the camp during designated periods of fire danger.

D. An equivalent level of fire suppression facilities may be determined by the governing body, or it's designate. The equivalent capability shall be based on the Oregon Department of Forestry's (ODF) Wildfire Hazard Zone rating system, the response time of the effective wildfire suppression agencies, and consultation with ODF personnel if the camp is within an area protected by ODF and not served by a local structural fire protection provider.

E. The provisions of paragraph (6)(C) may be waived by the governing body, or its designate, if the youth camp is located in an area served by a structural fire protection provider and that provider informs the governing body in writing that on-site fire suppression at the camp is not needed.

7. The governing body, or its designate, shall require as a condition of approval of a youth camp, that the land owner of the youth camp sign and record in the deed records for the county a document binding the land owner, or operator of the youth camp if different from the owner, and the land owner's or operator's successors in interest, prohibiting them from pursuing a claim for relief or cause of action alleging injury from farming or forest practices for which no action or claim is allowed under ORS 30.936 or 30.937.

SECTION 3.9400. COMMUNICATION FACILITIES SITING STANDARDS

Section 3.9410. Purpose

To accommodate the increasing communications needs of Clatsop County residents, businesses, and visitors, while protecting the public health, safety and general welfare and visual environment of the County, these regulations are established to:

1) Enhance the ability to provide communications services to County residents, businesses and visitors;
2) Simplify the process for obtaining permits for Communication Facilities, while at the same time protecting the legitimate interests of County residents;
3) Protect the County's natural resources and visual environment from the potential adverse visual effects of Communication Facilities, through careful design and siting standards;
4) Limit the number of towers needed to serve the County, by requiring facilities to be placed on existing buildings and structures where possible, and requiring co-location of wireless communication providers on existing and new towers.

These standards shall be construed to be consistent with any federal or state standards regulating communication facilities which pre-empt or take precedence over the standards herein. In the event that either the federal or state government adopt mandatory or standards more stringent than those described herein, these standards shall be revised accordingly.

Section 3.9415. Applicability

All communication facilities towers or antennas located within Clatsop County, whether

upon private or public lands shall be subject to Section 3.9400.

Only the following facilities shall be exempted from the application of this section:

1) Pre-existing towers or antenna. Towers and antenna existing prior to the date of this ordinance shall not be required to meet the requirements of this section, so long as the pre-existing towers and antenna were in compliance with all applicable permitting requirements in effect at the time of installation and are currently in compliance with all other required approvals, permits and exceptions.
2) Amateur (ham) and citizen band transmitters or radio stations, antennas and microwave dishes or receivers.
3) Maintenance or repair. Maintenance, repair or reconstruction of a communication facility and related equipment, provided that there is no change in the height or any other dimension of the facility.
4) Emergency Communication Facilities. Temporary communication facilities for emergency communications by public officials.

Section 3.9420. Definitions
The following definitions shall apply:

ANTENNA: An exterior transmitting or receiving device used in telecommunications that radiates or captures radio frequency signals or electromagnetic waves, including but not limited to directional antenna, such as panels, microwave dishes, and satellite dishes and omni-directional antenna, such as whip antenna but not including satellite earth stations.

ANTENNA, ATTACHED: An antenna mounted on an existing building, silo, smokestack, water tower, utility or power pole, or other support structure other than an antenna tower.

ANTENNA, CONCEALED (STEALTH): An antenna with a support structure that screens or camouflages the presence of antennas and/or towers from public view, in a manner appropriate to the site's context and surrounding environment. Examples of concealed antennas include manmade trees, clock towers, flag poles, light structures, and similar structures that camouflage or conceal the presence of antennas or towers.

ANTENNA TOWER: A freestanding structure, including monopole, guyed and lattice towers, designed and constructed primarily to support antennas and transmitting and receiving equipment. The term includes microwave towers, common-carrier towers, cellular telephone towers, and the like. The term includes the structure and any support thereto.

ANTENNA TOWER HEIGHT: The distance from the average grade at the antenna tower base to the highest point of the tower. Overall antenna tower height includes the base pad, mounting structures and panel antennas, but excludes lighting rods and whip antennas.

CO-LOCATION: Locating wireless communications equipment for more than one Communications Provider on a single structure.

COMMUNICATION FACILITIES (SECTION 1.030): Communication lines and towers, antennas and microwave receivers.

FACILITY (COMMUNICATION): The equipment, physical plant and portion of the property and/or building used to provide power and communication services, including but not limited to cables and wires, conduits, pedestals, antennas, towers, concealed structures, electronic devices, equipment buildings and cabinets, landscaping, fencing and screening, and parking areas.

MICROCELL: A low power facility used to provide increased capacity to telecommunications demand areas or provide infill coverage in areas of weak reception, including a separate transmitting and receiving station serving the facility.

UNREASONABLE ADVERSE IMPACT: The proposed project would produce an end result which is:

1. out-of-character with the designated scenic, natural, historic, and cultural resources affected, including existing buildings, structures, and features within the designated resource area, and
2. would diminish the scenic, natural, historic, and cultural value of the designated resource.

Section 3.9425. Zoning/Where Permitted

Communication Facilities are permitted as a principal or conditional use on a property as follows:

Zoning District	Attached Antennas	Concealed (stealth) antennas	Microcell Towers	Antenna Towers-New Facilities
CBR, CR, RSA-SFR, SFR-1	--	--	--	--
RA-1, RA-2, RA-5, RSA-MFR, RC-MFR, KS-RCR, RCR, AC-RCR	P	P	--	--
F-80	P	P(1)	P(80' or less in height) [1]	CUP II (100' or less in height) [1] CUP IIa (Towers > 100') [1]
AF, EFU	P	P(1)	P(80' or less in height) [1]	CUP II (Towers < 200' in height)[1] CUP IIa (Towers >200' in height)[1]
TC, NC	P	P	P (60' or less in height)	P(60' or less in height) CUP II (Towers >60')
GC, RCC	P	P	P(80' or less in height)	P(80' or less in height) CUP II (Towers > 80')
HI	P	P	P(80' or less in height)	P(100' or less in height) CUP II (Towers > 100')
MI	P	P	P(80' or less in height)	P(80' or less in height) CUP II (Towers > 80')
LI, RCI, RCC-LI	P	P	P(80' or less in height)	P(80' or less in height) CUP II (Towers > 80')
QM, UGB	--	--	--	--
OPR, RM	--	--	--	--
LW	--	--	--	--
CS, NS, EAC	--	--	--	--
AD	P	P	P (60' or less in height)	RUII (Towers 60' or less in height)
AC-2, AC-1, AN, NU	--	--	--	--
NAC-2, MR	--	--	--	--

P- Permitted by Type I Administrative Review {Section 2.1010}
CUP (II)- Type II Conditional Use Permit Review {Section 2.1020, 2.4000-2.4050}
CUP(IIa)- Type II(a) Hearing's Officer Conditional Use Permit Review {Section 2.1030, 2.4000-2.4050}
RU(II)- Type II Review Use Permit Review {Section 2.1020, 2.5000-2.5040)
- - Not Permitted

Special Conditions
(1): Project shall comply with Standards Section 3.9090 (Farm/Forest Zone Use Standards)

Section 3.9430. Preferred Communication Facilities
The order of preference for new permanent Communication Facilities is, from most preferred to least preferred.

1) Co-location on existing Communication Facilities; (if not technically feasible, then;)
2) Attached antennas (if not technically feasible, then;)
3) Concealed antennas (if not technically feasible, then;)
4) Microcell antenna towers (if not technically feasible; then;)
5) New Communication Facilities tower.

New Communication Facilities shall use the most preferred facility type where technically feasible. A lesser preferred facility type shall only be allowed if the applicant provides substantial evidence as outlined in Section 3.9450(5)(C),1)-7), or it can be demonstrated that the proposed facility will have a lesser visual impact than the use of more preferred facilities.

Section 3.9435. Facilities on Residential Properties
Communication Facilities may not be placed on properties or buildings zoned primarily for residential purposes, except as permitted by Section 3.9425 (Zoning/Where Permitted). This does not apply to buildings on farm and forest parcels containing dwelling units.

Section 3.9440. Facilities at Scenic, Natural, Historic and Cultural Areas
Communication Facilities may be located on a scenic, natural, historic and cultural site or structure subject to approval of a Type II(a) conditional use permit by the County Hearing's Officer. Communication Facilities shall not create an unreasonable adverse impact toward the view from any public park, natural scenic vista, historical building, major scenic and view corridor or residential area. In determining the potential unreasonable adverse impact of the proposed facility upon designated scenic, natural, historic and cultural resources, the Hearing's Officer shall consider the following factors:

1) The extent to which the proposed communications facility is visible from the viewpoint(s) of the impacted designated resource;
2) The type, number, height and proximity of existing structures and features, and background features within the same line of sight as the proposed facility;
3) The amount of vegetative screening;
4) The distance of the proposed facility from the impacted designated resource;
5) The presence of reasonable alternatives that allow the facility to function consistently with its purpose.

Section 3.9445. Communication Facilities Spacing
Antenna towers over 60 feet in height shall be located at least 2,640 feet from other Communication Facilities over 60 feet in height. Alternative spacing requirements may only be approved under the Conditional Development and Use process in accordance with Section 2.4050 and where it is demonstrated that the location of the towers will

take advantage of an existing natural or artificial feature to conceal the facility or minimize its visual impacts.

Section 3.9450. Requirements and Performance Standards
All Communication Facilities must demonstrate compliance with the following standards prior to County approval.

1) **Antenna Tower and Equipment Setbacks.**
   (A) Attached antennas. Attached antennas and other appurtenances may encroach up to 2 feet into the minimum building setbacks in the underlying zoning district, but shall not extend over property lines.
   (B) Concealed (stealth) antennas. Minimum setbacks for concealed antennas are the same as the minimum building setbacks in the underlying zone.
   (C) Communication Facilities, other than attached and concealed antennas. Minimum setbacks for Communication Facilities are as follows:
      1. From property lines or dedicated public right-of-way of properties zoned GC, TC, NC, HI, MI, LI, AF, F-80, EFU, TC, NC and AD when located adjacent to residential zoning- facilities shall be set back by a distance greater than or equal to two times the height of the structure.
      2. From property lines or dedicated public right-of-way of properties adjacent to the Oregon Department of Transportation's Scenic Byways for Highway 101 (Pacific Coast Scenic Byway) and Highway 30 (All American Road) (Refer to Figure 11- Oregon Scenic Byways)- facilities shall be set back by a distance greater than or equal to two times the height of the structure.
      3. All Communication Facilities, other than attached and concealed antennas, not located adjacent to residential zoning or the Oregon Scenic Byways of Highway 101 or 30, shall comply with the minimum setback requirements of the underlying zoning district.
      4. Alternative setbacks may only be approved under the Conditional Development and Use process in accordance with Section 5.030 and where it is demonstrated that the location of the proposed facility will take advantage of an existing natural or artificial feature to conceal the facility or minimize its visual impacts.
   (D) Guy wires and equipment buildings and cabinets. Minimum setbacks for guy wires and equipment buildings and cabinets are the same as the minimum building setbacks in the underlying zone.
2) **Equipment Design**.
   (A) Attached antennas on a roof may extend up to 15 feet over the height of the building or structure, and may exceed the underlying zone height limit. Alternative height limits for attached antennas may only be approved under the Type I Administrative Review process (Section 2.015) and where it is demonstrated that the location of the antenna(s) will take

advantage of an existing natural or artificial feature to conceal the facility or minimize its visual impacts. Attached antennas on a roof shall be located as close to the center of the roof as possible. Attached antennas mounted on a building or structure wall shall be as flush to the wall as technically possible, and shall not project above the top of the wall. Attached antennas and equipment shall be located, painted and/or screened to be architecturally and visually compatible with the building or structure it is attached on.

(B) Microcell antenna towers may contain up to three whip or panel antennas. Microcell antenna towers shall be painted or coated in a uniform non-reflective color that blends with the surrounding built and natural environment. The use of wood poles is further encouraged.

(C) Communication Facility antenna towers shall be painted or coated in a uniform non- reflective metallic color or other color that blends with the surrounding built and natural environment, unless state or federal regulations require different colors.

(D) Communication Facility antenna towers shall not be artificially lighted except as required by the FAA or other state or federal agency. If safety lighting is required by the FAA, the use of red beacons is preferred to flashing strobe lights. Security lighting on the site may be mounted up to 20 feet in height, and shall be directed towards the ground to reduce light pollution, prevent offsite light spillage, and avoid illuminating the tower.

(E) Equipment buildings shall be compatible with the architectural style of the surrounding built environment considering exterior materials, roof form, scale, mass, color, texture and character. Equipment buildings shall be constructed with materials that are equal to or better than the materials of the principal use. Equipment cabinets shall be located, painted and/or screened to be architecturally and visually compatible with the surrounding built and natural environment.

(F) Equipment shall not generate noise in excess of federal, state and local noise regulations. This does not apply to generators used in emergency situations where the regular power supply for a facility is temporarily interrupted.

3) **Site Design.** All Communication Facilities shall be designed to blend into the surrounding environment to the greatest extent feasible. The following measures shall be implemented:

(A) Screening and landscaping appropriate to the context of the site and in harmony with the character of the surrounding environment is required when any part of the Communication Facility is visible from a public right-of-way or adjacent properties. Fencing may be up to 8 feet in height. Natural materials shall be used for screening and fencing to the maximum extent possible. Wire fencing, if utilized, shall be screened from public view. If a facility fronts on a public street or abuts a residential zone, a combination of hedges and/or evergreen trees (at least 4 feet in height

when planted) shall be planted along the roadway or around the facility to provide a continuous visual screen.

(B) Existing vegetation and grades on the site shall be preserved as much as possible.

(C) Signage at the site is limited to non-illuminated warning and equipment identification signs. This does not apply to concealed antennas that are incorporated into freestanding signs. Signs shall be designed subject to the standards in Section 3.0130.

(D) Communication Facilities shall not include staffed offices, long term vehicle storage or other outdoor storage, or other uses not needed to send, receive or relay transmissions.

4) **Radio Frequency Emission Standards.** All existing and proposed Communication Facilities are prohibited from exceeding or causing other facilities to exceed the radio frequency emission standards specified by Part 1, Practice and Procedure, Title 47 of the Code of Federal Regulations, Section 1.1310, Radio Frequency Radiation Exposure Limits. A statement by a licensed professional engineer shall be provided demonstrating that the proposed facility complies with all FCC standards for radio emissions.

5) **Co-location Requirements for Communication Facilities.**

(A) Communication Facilities providers shall cooperate to achieve co-location of facilities and equipment. Communication Facilities providers shall not act to exclude other providers from co-locating on the same tower when co-location is structurally and technically possible. Competitive conflict shall not be considered an adequate reason to preclude co-location.

(B) In addition to equipment proposed for the applicant's use, proposed Communication Facilities shall be designed in all respects to accommodate both the applicant's antenna and comparable antenna for at least two (2) additional users if the antenna tower is over 100 feet in height or for at least one (1) additional comparable antenna if the antenna tower is between 60 feet and 100 feet in height.

(C) Availability of suitable existing towers or other structures for co-location. No new tower shall be permitted unless the applicant demonstrates that no existing tower or structure can accommodate the applicant's proposed antenna by co-locating. Evidence submitted to demonstrate that no existing tower or structure can accommodate the applicant's proposed antenna may consist of the following:

1. No existing towers or structures are located within the geographic area required to meet the applicant's engineering requirements.
2. Existing towers or structures are not of sufficient height to meet the applicant's engineering requirements.
3. Existing towers or structures do not have sufficient structural strength to support the applicant's proposed antenna and related equipment and cannot be reinforced to provide sufficient structural strength.

4. The applicant's proposed antenna would cause electromagnetic interference with the antenna on the existing tower and structures, or the antenna on the existing towers and structures would cause interference with the applicant's proposed antenna.
5. The fees or costs required to share an existing tower or structure or to adapt an existing tower or structure for sharing are unreasonable. Costs below new tower development are presumed reasonable.
6. Property owners or owners of existing towers or structures that are unwilling to accommodate the applicant's needs.
7. The applicant demonstrates that there are other limiting factors that render existing towers and structures unsuitable.

6) **Exceptions to Co-location**.

(A) The Community Development Director may reduce the required shared capacity described in Section 3.9450(5), if an antenna tower necessary to provide for such sharing dominates and adversely alters the areas visual character.

(B) If conditions for approval of a Communication Facilities include co-location, and:

1. The tower owner is not willing to provide space for other carriers when it would not impair the structural integrity of the tower or cause interference; or
2. The tower owner modifies the structure in a way to make co-location impractical or impossible; then the development and building permit and any related administrative or conditional use review or variance may be revoked by the Board of County Commissioners after a notice and a hearing. If approval is revoked, the Communication Facilities shall be removed at the owner's expense.

7) **Abandonment.** Communication Facilities will be considered abandoned if they are unused by all providers at the facility for a period of 180 consecutive days. Determination of abandonment shall be made by the Community Development Director, who shall have the right to demand documentation from the facility owner regarding the tower or antenna usage. Upon determination of abandonment, the facility owner shall have 90 days to:

(A) Reuse the facility, or transfer the facility to another owner who will reuse it; or

(B) Remove the facility. If the facility is not reused or removed within 90 days of determination of abandonment County approval shall expire, and the County may remove the facility at the facility and/or property owner's expense.

8) **Modification to Existing Facilities or Pre-existing Facilities.**

(A) Addition of equipment for co-location of additional Communication Facility providers on existing antenna towers and sites are not subject to the

conditional use review process, if the tower height remains unchanged. Addition of equipment for co-location of additional Communication Facility providers on existing legal nonconforming antenna towers is not considered a nonconforming use expansion, and is exempt from Section 3.1000 (Nonconforming Uses), if the tower height remains unchanged. Minor modifications to an existing Communications Facility shall be subject to the Type I Administrative Review process as outlined in Section 2.1010 (Type I Procedure). Proposed modifications or additions shall be submitted to the Community Development Director for approval if consistent with provisions of applicable communication facility siting standards.

(B) Minor and Major Modifications; the following definitions shall apply:

1. Minor modifications: The addition of equipment and no more than two (2) antenna arrays to any existing tower, so long as the addition of the antenna arrays add no more than twenty (20) feet in height to the facility. Minor modifications requested by the applicant may be approved under Section 2.1010 (Type I Procedure) if such changes are consistent with the purposes and general character of the original application.
2. Major modifications: Major modifications are any that exceed the definition of minor modifications. Major modifications to towers allowed under these regulations shall be subject to conditional use review.

9) **Building Codes and Safety Standards.** To insure the structural integrity of communication facilities, the owner of a facility shall insure that it is constructed, operated, and maintained in compliance with the standards contained in applicable local, state and federal building codes and the applicable standards for telecommunication facilities, as amended from time to time.

Section 3.9455. Application Submittal Requirements

1) **Application Contents:** Applications for administrative or conditional use review of proposed Communication Facilities, and additions or modifications to existing facilities, shall include the following:

(A) A site plan showing the location and legal description of the site; on-site land uses and zoning; adjacent roadways; parking and access; areas of vegetation and landscaping to be added, retained, replaced or removed; setbacks from property lines; and the location of the facility, including all related improvements and equipment.

(B) A vicinity map showing adjacent properties, land uses, zoning and roadways: within 500 feet of the proposed attached antenna site, proposed concealed (stealth) antenna, microcell antenna tower or a proposed Communication Facility tower.

(C) Elevation drawings of the proposed facility showing all antennas, towers, structures, equipment buildings and cabinets, fencing, screening,

landscaping, lighting, and other improvements related to the facility, showing specific materials, placement and colors.

(D) Photorealistic renderings (photo simulations) of the site after antenna tower construction, demonstrating the true impact of the antenna on the surrounding visual environment. The Community Development Director may request photorealistic renderings of the site from specific vantage points. This requirement does not apply to facilities permitted under the administrative review process, unless such information is requested by the Community Development Director.

(E) A report describing the facility and the technical, economic and other reasons for its design and location, the need for the facility and its role in the network; and describing the capacity of the structure, including the number and type of antennas it can accommodate.

(F) The FAA response to the Notice of Proposed Construction of Alteration (FAA Form 7460-1), if the facility is located near an airport or a flight path.

(G) A statement from the applicant verifying that the request has been submitted to the Oregon State Aeronautics Division for a formal response.

(H) A copy of the provider's Federal Communication Commission (FCC) license verifying that the applicant is authorized by the licensing guidelines of the FCC.

(I) A letter of intent to allow co-location on the antenna tower as provided in Section 3.9450(5)(Co-Location), if the Communication Facility is taller than 60 feet.

(J) A letter of intent to remove the facility at the expense of the facility and/or property owner if it is abandoned, as provided by Section 3.9450(7)(Abandonment). The letter shall include a signed statement by the property owner consenting the County entry to the property to remove an abandoned facility.

(K) Proof of ownership of the land upon which a Communication Facility is proposed to be constructed, or installed, or a copy of an appropriate easement, lease or rental agreement.

(L) A statement by a licensed professional engineer shall be provided demonstrating that the proposed facility complies with all FCC standards for radio emissions.

2) **Copies.** The Community Development Director may request additional copies of any submittal item for staff and agency review.

3) **Facility Inventory.** The first application for a proposed Communication Facility by a provider shall include a detailed inventory of all the provider's existing and approved facilities within Clatsop County, and all incorporated areas within the County.

Section 3.9460. Application Review

1) **Administrative Type I Review.** Applications for proposed Communications Facilities subject to administrative review shall be reviewed by the Community

Development Director for conformity with the requirements of 3.9425 (Zoning/Where Permitted) and 4.9450 (Requirements and Performance Standards) as well as the criteria identified in Section 2.1160 (Development Permit Decision). The Community Development Director shall render a decision to approve, approve with conditions or deny approval of the proposal within 45 days of submittal of the application. Any decision to deny a request to place, construct or modify facilities shall be in writing and shall include specific reasons for the action. A decision by the Community Development Director may be appealed by the applicant within 10 days of the decision to the County Hearing's Officer as specified in Section 2.2190 (Request for Review). The fee for Type I administrative review of a proposed Communication Facility shall be paid when the application is submitted. A Pre-application conference may be required at the discretion of the Community Development Director in accordance with Section 2.1070 (Preapplication conference).

2) **Conditional Use Permit Review.** Applications for proposed Communications Facilities subject to Type II (Section 2.1020) or Type II(a) (Section 2.1030) conditional use review shall be reviewed for conformity with the requirements of 3.9425 (Zoning/Where Permitted) and 3.9450 (Requirements and Performance Standards) as well as the criteria set forth within Section 2.4000-2.4050 (Conditional Use). The Community Development Director or Hearing's Officer shall render a decision within 150 days of receipt of a complete application. Any decision to deny a request to place, construct or modify facilities shall be in writing and shall include specific reasons for the action. A decision by the Community Development Director or Hearing's Officer may be appealed within 10 days of the decision to the Board of County Commissioners as specified in Section 2.2190 (Request for Review). The fee for the conditional use review of a proposed Communication Facility shall be paid when the application is submitted. A Pre-application conference may be required at the discretion of the Community Development Director in accordance with Section 2.1070 (Pre-application conference).

3) **Technical Issues and Expert Review.** Communications Facilities may involve complex technical issues that require review and input by independent experts. The Community Development Director may require the applicant to pay reasonable costs of a third party technical study for a proposed Communication Facility. Selection of expert(s) to review the proposal shall be the sole discretion of the County.

4) **Development and Building Permits.** Development and/or building permits shall not be issued until the facility is approved through the administrative or conditional use review process.

SECTION 3.9500. VEHICLE ACCESS CONTROL AND CIRCULATION

Section 3.9510. Purpose (Ord. 21-05)

The following access control standards apply to industrial, commercial and residential developments including land divisions as noted in the Land and Water Development

and Use Ordinance. Access shall be managed to maintain an adequate “level of service” and to maintain the “functional classification” of roadways as required by the Clatsop County Transportation System Plan. Major roadways, including arterials, and collectors, serve as the primary system for moving people and commerce within and through the county. “Access management” is a primary concern on these roads. Local streets and alleys provide access to individual properties. If vehicular access and circulation are not properly designed, these roadways will be unable to accommodate the needs of development and serve their transportation function.

The regulations in this section further the orderly layout and use of land, protect community character, and conserve natural resources by promoting well-designed road and access systems and discouraging the unplanned subdivision of land.

Section 3.9520. Definitions
The following definitions apply to this section.

ACCESS. The place, means, or way by which pedestrians, bicycles, and vehicles enter or leave property.

ACCESS MANAGEMENT. The control of street (or highway) access for the purpose of improving the efficiency safety, and/or operation of the roadway of vehicles; may include prohibiting, closing, or limiting direct vehicle access to a roadway from abutting properties, either with physical barriers (curbs, medians, etc.) or by land dedication or easement.

FIRE EQUIPMENT ACCESS DRIVE. A road which complies with the requirements for fire apparatus access roads as described in the Uniform Fire Code.

FLAG LOT. A lot not meeting minimum frontage requirements and where access to the public road is by a narrow private right-of-way line.

FRONTAGE STREET. A public or private drive which generally parallels a public street between the right-of-way and the front building setback line. The frontage street provides access to private properties which separating them from an arterial street.

SHARED DRIVEWAY. A driveway connecting two or more contiguous sites to the public street system.”

Section 3.9530. Clear Vision Area (Ord. 21-05)
A clear vision area shall be maintained on the corners of all property at the intersection of two streets or a street and a railroad.

1) A clear vision area shall consist of a triangular areas, two sides of which are lot lines measured from the corner intersection of the street lot lines for a distance specified in this regulation, or, where the lot lines have rounded corners, the lot lines extended in a straight line to a point of intersection and so measured, and the third side of which is a line across the corner of the lot joining the non-intersecting ends of the other two sides.

CLEAR-VISION AREAS -- (See Section S2.210)

1. A clear-vision area is a traingular area, two sides of which are lot lines for a distance of 20 feet, or where the lot lines have rounded corners, the lot lines extend in a straight line to a point if intersection and so measured, and the third side of which is a line across the corner of the adjoining non-intersecting ends of the other two sides.

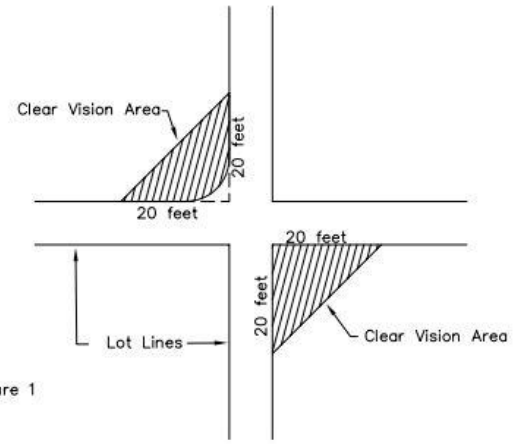

Figure 1

2. Service drives and accessways to public streets shall have a minimum vision clearance area formed by the intersection of the driveway centerline, the street right of way line, and a straight line joining said lines through points twenty (20) feet from their intersection.

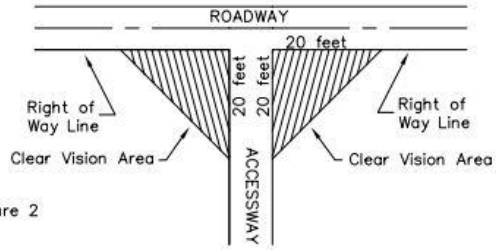

Figure 2

3. A clear-vision area contains no planting, fence, wall, structure or temporary or permanent obstruction exceeding 2.5 feet in height, measured from the top of curb or, where no curb exists, from the established street center line grade, except that trees exceeding this height may be located in this area, provided all branches and foliage area removed to a height of eight feet above grade.

2) A clear vision area shall contain no planting, fence, wall, structure or temporary or permanent obstruction exceeding 2.5 feet in height, measured from the top of the curb or, where no curb exists, from the established street center line grade, except that trees exceeding this height may be located in this area, provided all branches and foliage are removed to a height of eight (8) feet above the grade.

3) The following measurements shall establish clear vision areas:
   A. In an agricultural or residential zone the minimum distance shall be thirty (30) feet or, at intersections including an alley, ten (10) feet.
   B. In all other zones where yards are required, the minimum distance shall be fifteen (15) feet or, at intersections including an alley, ten (10) feet, except that when the angle of intersection between streets, other than an alley, is less than thirty (30) degrees, the distance shall be twenty-five (25) feet.

Section 3.9540. Access Control Standards (Ord. 21-05)

1) **Traffic Impact Study Requirements.** The County or other agency with access jurisdiction may require a traffic impact study prepared by a qualified professional to determine access, circulation and other transportation requirements. (See, Section 2.9510 – Traffic Impact Study.)
2) The County or other agency with access permit jurisdiction may require the closing or consolidation of existing curb cuts or other vehicle access points, recording of reciprocal access easements (i.e., for shared driveways), development of a frontage street, installation of traffic control devices, and/or other mitigation as a condition of granting an access permit, to ensure the safe and efficient operation of the street and highway system.
3) **Access Options.** When vehicle access is required for development (i.e., for off-street parking, delivery, service, drive-through facilities, etc.), access shall be provided by one of the following methods (a minimum of 10 feet per lane is required). These methods are "options" to the developer/subdivider.
   (A) **Option 1.** Access is from an existing or proposed alley or mid-block lane. If a property has access to an alley or lane, direct access to a public street is not permitted.
   (B) **Option 2.** Access is from a private street or driveway connected to an adjoining property that has direct access to a public street (i.e., "shared driveway"). A public access easement covering the driveway shall be recorded in this case to assure access to the closest public street for all users of the private street/drive.
   (C) **Option 3.** Access is from a public street adjacent to the development parcel. If practicable, the owner/developer may be required to close or consolidate an existing access point as a condition of approving a new access. Street accesses shall comply with the access spacing standards in Subsection (6) below.
   (D) Access to and from off-street parking areas shall not permit backing onto a public street. Except that in limited situations where no alternative design is possible and sight distances are acceptable, parking areas having three or fewer spaces may allow for backing onto a collector or local street subject to the approval of the Public Works Director, County Engineer or designee.
4) **Subdivisions Fronting onto an Arterial Street.** New residential land divisions fronting onto an arterial street shall be required to provide alleys or secondary (local or collector) streets for access to individual lots. When alleys or secondary streets cannot be constructed due to topographic or other physical constraints, access may be provided by consolidating driveways for clusters of two or more lots (e.g., includes flag lots and mid- block lanes).

5) **Double-Frontage Lots.** When a lot has frontage onto two or more streets, access shall be provided first from the street with the lowest classification. For example, access shall be provided from a local street before a collector or arterial street. Except for corner lots, the creation of new double-frontage lots shall be prohibited in the RSA-SFR, RSA-MFR, CR, SFR-1, RA-1, RA-5, or CBR Zones, unless topographic or physical constraints require the formation of such lots. When double-frontage lots are permitted in the RSA- SFR, RSA-MFR, CR, SFR-1, RA-1, RA-5, or CBR Zones, a landscape buffer with trees and/or shrubs and ground cover not less than 20 feet wide shall be provided between the back yard fence/wall and the sidewalk or street; maintenance shall be assured by the owner (i.e., through homeowner's association, etc.).

6) **Reverse Frontage Lots.** When a lot has frontage opposite that of the adjacent lots, access shall be provided from the street with the lowest classification.

7) **Access Spacing.** The access spacing standards below shall apply to newly established public street intersections, private drives, and non-traversable medians unless the Public Works Director, County Engineer or designee determines that site and or road conditions make it impractical to meet the access spacing standard.

Access Spacing			
Functional Classification	Posted Speed	Minimum Spacing Between Driveways and/or Streets	Minimum Spacing Between Traffic Signals
Arterial	35 mph or less	265 feet	Per ODOT Standards
	40 mph	265 feet	
	45 mph	265 feet	
	50 mph	265 feet	
	55 mph	265 feet	
Major Collector	25-35 mph	130 feet	
Minor Collector	25-35 mph	65 feet	
Local Street	25 mph	Access to each lot permitted	
Subdivision (10+ lots)	25 mph	Access to each lot permitted	N/A

Subdivision (4-9 lots)	20 mph		
Partition (> 3 ***)	20 mph		
Partition (1-3 lots)	15 mph		

8) **Number of Access Points.** For single-family (detached and attached), two-family, and three-family housing types, one street access point is permitted per lot, when alley access cannot otherwise be provided; except that two access points may be permitted for two- family and three-family housing on corner lots (i.e., no more than one access per street), subject to the access spacing standards above. The number of street access points for multiple family, commercial, industrial, and public/institutional developments shall be minimized to protect the function, safety and operation of the street(s) and sidewalk(s) for all users. Shared access may be required, in conformance with Section 3.9540(9), below, in order to maintain the required access spacing, and minimize the number of access points. An additional access point may be allowed as determined by the Public Works Director, County Engineer or designee.

9) **Shared Driveways.** The number of driveway and private street intersections with public streets shall be minimized by the use of shared driveways with adjoining lots where feasible. The County shall require shared driveways as a condition of land division or site design review, as applicable, for traffic safety and access management purposes in accordance with the following standards:

(A) Shared driveways and frontage streets may be required to consolidate access onto a collector or arterial street. When shared driveways or frontage streets are required, they shall be stubbed to adjacent developable parcels to indicate future extension. “Stub” means that a driveway or street temporarily ends at the property line, but may be extended in the future as the adjacent parcel develops. “Developable” means that a parcel is either vacant or it is likely to receive additional development (i.e., due to infill or redevelopment potential).

(B) Access easements (i.e., for the benefit of affected properties) shall be recorded for all shared driveways, including pathways, at the time of final plat approval or as a condition of site development approval.

(C) Exception. Shared driveways are not required when existing development patterns or physical constraints (e.g., topography, parcel configuration, and similar conditions) prevent extending the street/driveway in the future.

10) **Street Connectivity and Formation of Blocks Required.** In order to promote efficient vehicular and pedestrian circulation throughout the county, land divisions and large site developments, as determined by the Community Development Director, shall produce complete blocks bounded by a connecting network of public and/or private streets, in accordance with the following standards:

(A) **Block Length and Perimeter.** No block shall be more than 1,000 feet in length between street corner lines unless it is adjacent to an arterial street. The recommended minimum length of blocks along an arterial street is 1.800 feet. An exception to the above standard may be granted, as part of the applicable review process, when blocks are divided by one or more pathway(s); pathways shall be located to minimize out-of-direction travel by pedestrians and may be designed to accommodate bicycles; or where the site's topography or the location of adjoining streets makes it impractical to meet the standard.

(B) **Street Standards.** Public and private streets shall also conform to Sections 3.9800 – Transportation Improvements and Road Standard Specifications for Design and Construction, Section 3.9550 - Pedestrian and Bicycle Access and Circulation, Figures 3.1-3.5, and applicable Americans With Disabilities Act (ADA) of 1990 design standards.

(C) **Driveway Openings.** Driveway openings or curb cuts shall be the minimum width necessary to provide the required number of vehicle travel lanes (12 feet for each travel lane). The following standards (i.e., as measured where the front property line meets the sidewalk or right-of-way) are required to provide adequate site access, minimize surface water runoff, and avoid conflicts between vehicles and pedestrians:

1. Single family, two-family, and three-family uses shall have a minimum driveway width of 10 feet, and a maximum width of 24 feet.
2. Multiple family uses with between 4 and 7 dwelling units shall have a minimum driveway width of 20 feet, and a maximum width of 24 feet.
3. Multiple family uses with more than 8 dwelling units, and off-street parking areas with 16 or more parking spaces, shall have a minimum driveway width of 24 feet, and a maximum width of 30 feet. These dimensions may be increased if the Community Development Director determines that more than two lanes are required based on the number of trips generated or the need for turning lanes.
4. Access widths for all other uses shall be based on 12 feet of width for every travel lane, except that driveways providing direct access to parking spaces shall conform to the parking area standards in Sections 3.9800 – Transportation Improvements and Road Standard Specifications for Design and Construction.

5. Driveway Aprons. Driveway aprons (when required) shall be constructed of concrete or asphalt and shall be installed between the street right-of-way and the private drive, as shown above. Driveway aprons shall conform to ADA standards for sidewalks and pathways, which require a continuous route of travel that is a minimum of 4 feet in width, with a cross slope not exceeding 2 percent.

11) **Fire Access and Parking Area Turn-Arounds.** A fire equipment access drive shall be provided for any portion of an exterior wall of the first story of a building that is located more than 150 feet from an existing public street or approved fire equipment access drive, or an alternative acceptable to the local Fire District and Public Works Director, County Engineer or designee. Parking areas shall provide adequate aisles or turn-around areas for service and delivery vehicles so that all vehicles may enter the street in a forward manner. For requirements related to cul-de-sacs, please refer to Section 3.9620(10) - Cul-de-Sac.

12) **Vertical and Horizontal Clearances.** Driveways, private streets, aisles, turn-around areas and ramps shall have a minimum vertical clearance of 13’ 6” for their entire length and width and horizontal clearance of no less than 20’.

13) **Vision Clearance.** See Section 3.6530. Clear Vision Area.

14) **Vision Clearance.** See Section 3.6530. Clear Vision Area.

15) **Construction.** The following development and maintenance standards shall apply to all driveways and private streets, except that the standards do not apply to driveways serving one single-family detached dwelling:

(A) **Surface Options.** Driveways, parking areas, aisles, and turn-arounds may be paved with asphalt, concrete or comparable surfacing, or a durable non-paving material may be used to reduce surface water runoff and protect water quality. Paving surfaces shall be subject to review and approval by the Public Works Director, County Engineer or designee.

(B) **Surface Water Management.** When a paved surface is used, all driveways, parking areas, aisles and turn-arounds shall have on-site collection or infiltration of surface waters to eliminate sheet flow of such waters onto public rights-of-way and abutting property. Surface water facilities shall be constructed in conformance with standards approved by the Public Works Director, County Engineer or designee.

(C) **Driveway Aprons.** Driveway approaches or “aprons” are required to connect driveways to the public right-of-way when the existing roadway is constructed of asphalt or concrete. Driveway aprons shall be paved with concrete or asphalt surfacing.

SECTION 3.9550. PEDESTRIAN AND BICYCLE ACCESS AND CIRCULATION

Section 3.9560. Purpose (Ord. 21-05)

To ensure safe, direct and convenient pedestrian and bicycle circulation, all new development in rural communities, except single family detached housing (i.e., on individual lots), shall provide a continuous pedestrian and/or shared use pathway

system. (Pathways only provide for pedestrian circulation. Shared use pathways accommodate pedestrians and bicycles.) The system of pathways shall be designed based on the standards below:

1) **Continuous Pathways.** The pathway system shall extend throughout the development site, and connect to all future phases of development, adjacent trails, public parks and open space areas whenever possible. The developer may also be required to connect or stub pathway(s) to adjacent streets and private property, in accordance with the provisions of Section 3.9540 - Access Control Standards, and Section 3.9800 - Transportation Improvements and Road Standard Specifications for Design and Construction

2) **Safe, Direct, and Convenient Pathways.** Pathways within developments shall provide safe, reasonably direct and convenient connections between primary building entrances, and all adjacent streets based on the following definitions:
   (A) **Reasonably direct.** A route that does not deviate unnecessarily from a straight line or a route that does not involve a significant amount of out-of-direction travel for likely users.
   (B) **Safe and convenient.** Bicycle and pedestrian routes that are reasonably free from hazards and provide a reasonably direct route of travel between destinations.

3) **Connections Within Development.** For all developments subject to Site Plan Review, pathways shall connect all building entrances to one another. In addition, pathways shall connect all parking areas, storage areas, recreational facilities and common areas (as applicable), and adjacent developments to the site.

4) **Street Connectivity.** Shared use pathways (for pedestrians and bicycles) shall be provided at or near mid-block where the block length exceeds the length required by Section 3.9630. Pathways shall also be provided where cul-de-sacs or dead-end streets are planned, to connect the ends of the streets together, to other streets, and/or to other developments. Pathways used to comply with these standards shall conform to all of the following criteria:
   (A) Shared use pathways (i.e., for pedestrians and bicyclists) are no less than 10-feet wide and located within a 14 foot right-of-way or easement that allows access for emergency vehicles;
   (B) If streets within a subdivision or neighborhood are lighted, pathways shall also be lighted;
   (C) Stairs or switchback paths using a narrower right-of-way/easement may be required in lieu of a shared use pathway where grades are steep;

(D) The Community Development Director may determine, based upon facts in the record, that a pathway is impracticable due to: physical or topographic conditions (e.g., freeways, railroads, extremely steep slopes, sensitive lands, and similar physical constraints); buildings or other existing development on adjacent properties that physically prevent a connection now or in the future, considering the potential for redevelopment; and sites where the provisions of recorded leases, easements, covenants, restrictions, or other agreements recorded as of the effective date of this Code prohibit the pathway connection.

1. **Vehicle/Pathway Separation.** Where pathways are parallel and adjacent to a driveway or street (public or private), they shall be raised 6 inches and curbed, or separated from the driveway/street by a 5-foot minimum strip with bollards, a landscape berm, r other physical barrier. If a raised path is used, the ends of the raised portions must be equipped with curb ramps.
2. **Housing/Pathway Separation.** Pedestrian pathways shall be separated a minimum of 5 feet from all residential living areas on the ground floor, except at building entrances. Separation is measured from the pathway edge to the closest dwelling unit. The separation area shall be landscaped. No pathway/building separation is required for commercial, industrial, public, or institutional uses.
3. **Crosswalks.** Where pathways cross a parking area, driveway, or street ("crosswalk"), they shall be clearly marked with contrasting paving materials, humps/raised crossings, or painted striping. An example of contrasting paving material is the use of a concrete crosswalk through an asphalt driveway. If painted striping is used, it should consist of thermo-plastic striping or similar type of durable application.
4. **Pathway Surface.** Pedestrian pathway surfaces shall be concrete, asphalt, brick/masonry pavers, or other durable surface, at least 5 feet wide, and shall conform to ADA requirements. Multi-use paths (i.e., for bicycles and pedestrians) shall be the same materials, at least 8 feet wide.
5. **Accessible routes.** Pathways shall comply with the federal Americans With Disabilities Act (ADA), which requires accessible routes of travel from the parking spaces to the accessible entrance. The route shall be compliant with the following minimum standards:
   (a) Shall not contain curbs or stairs;
   (b) Must be at least 3 feet wide;
   (c) Is constructed with a firm, stable, slip resistant surface; and
   (d) The slope shall not be greater than 1:12 in the direction of travel.

SECTION 3.9600. SUBDIVISION DESIGN STANDARDS

Section 3.9610 Principles of Acceptability

A subdivision shall conform to the current Comprehensive Plan and shall take into consideration preliminary plans made in anticipation thereof a subdivision shall conform to the requirements of state law and the standards established by this Ordinance.

Section 3.9620. Streets (Ord. 21-05)

1) **General.** The location, width, and grade of streets shall be considered in their relation to existing and planned streets, to topographical conditions, to public convenience and safety, and to the proposed use of the land to be served by the streets. Where location is not shown in a comprehensive development plan, the arrangement of streets in a subdivision shall either:
   (A) Provide for the continuation or appropriate projection of existing principal streets in surrounding areas; or
   (B) Conform to a plan for the neighborhood approved or adopted by the Planning Commission to meet a particular situation where topographical or other conditions make continuance or conformance to existing streets impractical.
2) **Minimum right-of-way and roadway widths.** The width of streets and roadways shall be adequate to fulfill County specifications as provided in Section 3.9800 of this Ordinance.
3) Where existing conditions, such as the topography or the size or shape of land parcels, make it otherwise impractical to provide buildable lots, the Planning Commission, in coordination with the Public Works Director, County Engineer, or designee may accept a narrower right-of-way. If necessary, special slope easements may be required.
4) **Reserve strips.** Reserve strips or street plugs controlling access to streets will not be approved unless necessary for the protection of the public welfare or of substantial property rights and in these cases they may be required. The control and disposal of the land comprising such strips shall be placed within the jurisdiction of the County under conditions approved by the Planning Commission.
5) **Alignment.** As far as practical, streets other than minor streets shall be in alignment with existing streets by continuations of the center lines thereof. Staggered street alignment resulting in "T" intersections shall wherever practical leave a minimum distance of 200 feet between the center lines of streets having approximately the same direction and otherwise shall not be less than 125 feet.
6) **Future extension of streets.** Where necessary to give access to or permit a satisfactory future subdivision or adjoining land, streets shall be extended to the boundary of the subdivision and the resulting dead-end streets may be approved without a turnaround. Reserve strips and street plugs may be required to preserve the objectives of street extensions.
7) **Intersection angles.** Streets shall be laid out to intersect at angles as near to right angles as practical except where topography requires a lesser angle, but in

no case shall the acute angle be less than 60 degrees unless there is a special intersection design. The intersection of an arterial or collector street with another street shall have at least 100 feet of tangent adjacent to the intersection unless topography requires a lesser distance. Other streets, except alleys, shall have at least 50 feet or tangent adjacent to the intersection unless topography requires a lesser distance. Intersections which contain an acute angle of less than 80 degrees or which include an arterial street shall have a minimum corner radius sufficient to allow for roadway radius of 20 feet and maintain a uniform width between the roadway and the right-of-way line.

8) **Existing streets.** Whenever existing streets adjacent to or within a tract are of inadequate width, additional right-of-way shall be provided at the time of subdivision.

9) **Half streets.** Half streets, while generally not acceptable, may be approved where essential to the reasonable development of the subdivision, when in conformity with the other requirements of these regulations, and when the Planning Commission finds it will be practical to require the dedication of the other half when the adjoining property is subdivided. Whenever a half street is adjacent to a tract to be subdivided, the other half of the street shall be platted within such tract. Reserve strips and street plugs may be required to preserve the objectives of half strips.

10) **Cul-de-sacs.** a cul-de-sac shall be as short as possible and shall terminate with a turnaround.

11) **Street names.** Except for extensions of existing streets, no street shall be used which will duplicate or be confused with the names of existing streets. Street names and numbers shall conform to the established pattern in the surrounding area and, if near a city, to the pattern in the city. Applications for new subdivisions shall include a list of street names pre-approved by the County Road Naming Review Committee.

12) **Grades and curves.** Grades and curves shall be in accordance with Table 3.2 – Right-of-way and Improvement Standards Table. Where existing conditions, particularly topography, make it otherwise impractical to provide buildable lots, the County Engineer may accept steeper grades and sharper curves.

13) **Streets adjacent to railroad right-of-way.** Wherever the proposed subdivision contains or is adjacent to a railroad right-of-way, provision may be required for a street approximately parallel to and on each side of such right-of-way at a distance suitable for the appropriate use of the land between the streets and the railroad. The distance shall be determined with due consideration at cross streets of the minimum distance required for approach grades to a future grade separation and to provide sufficient depth to allow screen planting along the railroad right-of-way.

14) **Marginal access streets.** Where a subdivision abuts or contains an existing or proposed arterial street, the Planning Commission may require marginal access streets, reverse frontage lots with suitable depth, screen planting contained in a non-access reservation along the rear or side property line, or other treatment

necessary for adequate protection of residential properties and to afford separation of through and local traffic.

15) **Alleys.** Alleys shall be provided in commercial and industrial districts, unless other permanent provisions for access to off-street parking and loading facilities are approved by the Planning Commission.

Section 3.9630. Blocks (Ord. 21-05)

1) **General.** The length, width, and shape of blocks shall take into account the need for adequate lot size and street width and shall recognize the limitations of the topography.

2) **Size.** No block shall be more than 1,000 feet in length between street corner lines unless it is adjacent to an arterial street or unless the topography or the location of adjoining street justifies an exception. The recommended minimum length of blocks along an arterial street is 1,800 feet.

3) **Easements.**

(A) **Utility lines.** Easements for sewers, water mains, electric lines, or other public utilities shall be dedicated whenever necessary. The easements shall be at least 15 feet wide and centered on lot lines where possible. Electric lines or other similar utilities along with utility pole tieback easements may be reduced to six feet in width as appropriate for the particular utility.

(B) **Water courses.** If a subdivision is traversed by a water course such as a drainage way, channel, or stream, there shall be provided a storm water easement or drainage right-of- way conforming substantially with the lines of the water course, and such further width as will be adequate for the purpose. Streets or parkways parallel to major water courses may be required.

(C) **Pedestrian ways.** When desirable for public convenience, pedestrian pathways shall be required to connect to cul-de-sacs or to pass through unusually long or oddly shaped blocks in accordance with Section 3.9550.

Section 3.9640. Lots (Ord. 21-05)

1) **Size and shape.** Lot size, width, shape, and orientation shall be appropriate for the location of the subdivision and for the type of use contemplated. An interior lot shall have a minimum average width of 50 feet and a corner lot a minimum average width of 60 feet. a lot shall have a minimum average depth of 100 feet, and the depth shall not ordinarily exceed two times the average width. These minimum standards shall apply with the following exceptions:

(A) In areas that will not be served by a public water supply or a sewer, minimum lot sizes shall conform to the requirements of the County Health Department and shall take into consideration requirements for water supply and sewage disposal, as specified in Section 34. The depth of such lots shall not ordinarily exceed two times the average width.

(B) Where property is zoned, lot sizes shall conform to the zoning requirement. Depth and width of properties reserved or laid out for commercial and industrial purposes shall be adequate to provide for the off-street parking and service facilities required by the type of use contemplated.

2) **Access.** Each lot shall abut upon a street other than an alley for a width of at least 25 feet.

3) **Through lots.** Through lots shall be avoided except where they are essential to provide separation of residential development from traffic arteries or adjacent non-residential activities or to overcome specific disadvantages of topography and orientation. a planting screen easement at least 10 feet wide and across, which there shall be no right of access may be required along the line of lots abutting such a traffic artery or other incompatible use.

4) **Lot side lines.** The side lines of lots, as far as practicable, shall run at right angles to the street upon which the lots face.

Section 3.9650. General Soil Development
Lot grading in areas subject to the geologic hazard overlay zone shall conform to the standards of Section 5.3000.

Section 3.9660. Building Lines
If special building setback lines are to be established in the subdivision, they shall be shown on the subdivision plat or included in the deed restriction.

Section 3.9670. Large Lot Subdivision (Ord. 21-05)
In subdividing tracts into large lots which at some future time are likely to be further re-subdivided, the Planning Commission may require that the blocks be of such size and shape, be so divided into lots, and contain such building size restrictions as will provide for extension and opening of streets at intervals which will permit a subsequent division of any parcel into lots of smaller size.

Section 3.9680. Land for Public Purposes
If the County has an interest in acquiring any portion of the proposed subdivision for a public purpose, or if the County has been advised of such interest by a school district or other public agency, and there is reasonable assurance that steps will be taken to acquire the land, then the Planning Commission may require that those portions of the subdivision be reserved for public acquisition, for a period not to exceed one year.

SECTION 3.9690. SUBDIVISION IMPROVEMENTS
Section 3.9700. Improvement Procedures
In addition to other requirements, improvements shall conform to the requirements of this ordinance and improvement standards or specifications adopted by the County and shall be installed in accordance with the following procedure:

1) Work shall not be commenced until plans have been reviewed for adequacy and approved by the County. To the extent necessary for evaluation of the subdivision proposal, the plans may be required before approval of the final map. All plans shall be prepared on tracing cloth in accordance with requirements of the County.
2) Work shall not be commenced until the County has been notified in advance, and if work has been discontinued for any reason it shall not be resumed until the County has been notified.
3) Required improvements shall be inspected by and constructed to the satisfaction of the County. The County may require changes in typical sections and details if unusual conditions arising during construction warrant such change in the public interest.
4) Underground utilities, sanitary sewers, and storm drains installed in streets by the subdivider shall be constructed prior to the surfacing of the streets. Stubs for service connections for underground utilities and sanitary sewers shall be placed to lengths that will avoid the need to disturb street improvements when service connections are made.
5) A map showing public improvements as built shall be filed with the County Engineer upon completion of the improvements.

Section 3.9710. Specifications for Improvements (Ord. 21-05)
The County Engineer shall prepare and submit to the Board of County Commissioners specifications to supplement the standards of this ordinance based on engineering standards appropriate for the improvements concerned. Specifications shall be prepared for the construction of the following (Figures 3.1-3.5):
1) Streets including related improvements such as curbs, shoulders, median strips and sidewalks, and including suitable provisions for necessary slope easements.
2) Drainage facilities.
3) Sidewalks in pedestrian ways.
4) Sewers and sewage disposal facilities.
5) Public water supplies and water distribution systems.

In absence of specifications prepared by the County Engineer, the latest edition of the Oregon Standards Specifications for Construction prepared by the Oregon Department of Transportation shall be used. Whenever these specifications refer to the State, consider that to mean the County of Clatsop, the appropriate County Department or appropriate County address.

Section 3.9720. Improvement Requirements (Ord. 21-05)
The following improvements shall be installed at the expense of the subdivider:
1) **Water supply.** Lots within a subdivision shall either be served by a public domestic water supply system conforming to State or County specifications or the lot size shall be increased to provide such separation of water sources and

sewage disposal facilities as the County Sanitarian or Oregon Department of Environmental Quality considers adequate for soil and water conditions.

2) **Sewage.** Lots within a subdivision either shall be served by a public sewage disposal system conforming to State or County specifications or the lot size shall be increased to provide sufficient area for a septic tank disposal system approved by the County Sanitarian as being adequate for soil and water conditions considering the nature of the water supply.

3) **Drainage.** Such grading shall be performed and drainage facilities installed conforming to County specifications as necessary to provide proper drainage within the subdivision and other affected areas in order to secure healthful, convenient conditions for the residents of the subdivision and for the general public. Drainage facilities in the subdivision shall be connected to drainage ways or storm sewers outside the subdivision. Dikes and pumping systems shall be installed if necessary to protect the subdivision against flooding or other inundation.

4) **Streets.** Where streets are to be accepted into the County road system, the subdivider shall grade and improve streets in the subdivision and the extension of such streets to the paving line of existing streets with which such streets intersect in conformance with County specifications. Street improvements shall include related improvements such as curbs, shoulders, sidewalks and median strips to the extent these are required. All other streets shall be improved in accordance with minimum road standards as set forth in 3.9800.

5) **Pedestrian ways.** A sidewalk in conformance with the standards of Section S5.034 shall be installed in the center of pedestrian ways.

6) **Underground utilities.** Underground utilities shall be required.

SECTION 3.9800. TRANSPORTATION IMPROVEMENTS AND ROAD STANDARD SPECIFICATIONS FOR DESIGN AND CONSTRUCTION

Section 3.9810. General Road and Access Policies (Ord. 21-05)

1) **Purpose.** The establishment of the criteria to be used in Clatsop County for evaluating the appropriateness of proposed roads which are intended to provide access to lots or parcels. These criteria shall form the basis for determining what requirements are necessary to ensure that there will be adequate provisions available now, and in the future, to provide for the transportation needs of lots, parcels, or developments.

   The Clatsop County Road Standards are intended to provide access to new development in a manner which reduces construction cost, makes efficient use of land, allows emergency vehicle access while discouraging inappropriate traffic volumes and speeds, and which accommodates convenient pedestrian and bicycle circulation. The standards apply to County roads, dedicated roads and private roads.

The Road Standards to be applied are based on the density of the zone in which it will be built and shall be constructed to that standard. The Clatsop County Department of Community Development, Planning Commission or Board of County Commissioners will on a case by case basis consider possible future land divisions and whether or not the road being built should be private or dedicated.

Where a partition is proposed in Major or Peripheral Big Game Range areas, the road shall be located to minimize its impact on big game range.

2) **Conditions of Development Approval.** No development may occur unless required transportation facilities are in place or guaranteed, in conformance with the provisions of this document. Improvements required as a condition of development approval, when not voluntarily accepted by the applicant, shall be roughly proportional to the impact of development on public facilities and services. Findings in the development approval shall indicate how the required improvements are roughly proportional to the impact.

3) **Criteria.** Roads in Clatsop County shall be designed, constructed, and maintained to:
   - (A) Be capable of ensuring unrestricted travel to and from a property.
   - (B) Provide adequate, safe, and legal access with minimum public cost.
   - (C) Place the burden of the costs on the benefited person(s).
   - (D) Provide access for fire protection, ambulance, police, mail, school bus, public transit, and garbage services.
   - (E) Provide for drainage ways and utility services.
   - (F) Be compatible with adjoining land use.
   - (G) Minimize, with the constraints of reasonable engineering practices and costs, the creation of roads within lands designated for Exclusive Farm Use, Forest Resource, Open Space Reserve, Rural and Rural Service Areas designated by the Clatsop County Comprehensive Plan.
   - (H) Ensure that the new road will minimize interference with forest management or harvesting practices.
   - (I) Minimize within the constraints of reasonable engineering practices and costs the loss of productive agricultural or forest land, and be located on that portion of such land that is least suitable for timber or agricultural production, taking into consideration, but not limited to, the following: topography, soil capability or classification, erosion potential, and the size and resultant configuration of the affected tracts.
   - (J) Minimize the loss of important wildlife habitat, such as sensitive deer and elk range, identified natural areas, and other significant natural features.
   - (K) Facilitate safe and convenient pedestrian and bicycle trips to meet local travel needs in developed areas.
   - (L) Streets within or adjacent to a development shall be improved in accordance with the Transportation System Plan and the provisions of this Section.

4) **Standards, Generally:**

(A) The following are a variety of types or forms of access used to gain ingress and egress to property within Clatsop County:
1. County roads
2. Federal roads
3. State highways
4. Dedicated ways
5. Flag lots
6. Ways of necessity
7. Public roads
8. Private roads
9. Prescriptive roads

(B) Publicly dedicated and maintained roads provide superior access.

(C) Flag lots may provide access, but can hinder future development of the surrounding area.

(D) Private roads function best if they are designed to serve a predetermined, limited amount of development.

(E) Paved roads are safer, less of a nuisance, and more economical to maintain than gravel roads.

(F) Road requirements should support a complete transportation network, and not inhibit new land development innovations and concepts.

(G) Dedicated ways or County roads shall be the ordinary standard recommended for subdivisions, except as may be dictated by natural hazards, topography, or other special circumstances.

5) **Standards, Specifically:**

(A) As far as is feasible, roads shall be in alignment with existing or appropriate projections of existing roads by continuation of their centerline.

(B) When necessary to give access to, or permit a satisfactory future division of adjoining lands, rights-of-way or easements shall be extended to the boundary of a major partition, subdivision, or development. A temporary turnaround may be required for the resulting dead end road in accordance with Oregon Fire Code.

(C) Frontage roads, or double frontage parcels or lots may be required by the County when a proposed parcel or lot would otherwise abut an arterial or collector road in order to effect separation of through and local traffic. In addition, screening or other treatments may be required along arterials and collectors in order to provide adequate noise and visual protection to adjacent properties.

(D) Whenever a proposed division or development is intended to abut a public road, the County shall restrict or limit as to location and number, vehicular access points unless specifically exempted in any approval thereof.

(E) Where a cut or fill road slope is outside the normal right-of-way, a slope easement shall be required of sufficient width to permit maintenance of the cut or fill and drainage structure.

Section 3.9820. Improvement Plans (Ord. 21-05)
The Improvement Plans will include, but not be limited, to the following:

1) **A plan view showing:**
   - (A) Dimensioning necessary to survey and relocate the roadway.
   - (B) Right-of-way lines as shown on the final plat.
   - (C) Proposed drainage structures, showing both size and type of structure.
   - (D) Location of all existing and proposed utilities.
   - (E) Location and dimensions of the pedestrian circulation system.
   - (F) Location of bicycle parking.
   - (G) Location and type of signs.
   - (H) Toe of slope and top of cut lines showing the limits of the construction area within the dedication.
   - (I) Section lines, fractional section lines and/or Donation Land Claim lines tie to corner from which dedication description is prepared.
   - (J) Vicinity map on the first plan sheet showing roughly the relationships of the proposed road to cities, state highways, county roads, or other well defined topographical features.
   - (K) The stamp and signature of the Registered Professional Engineer preparing the plans.
2) **A profile showing:**
   - (A) Centerline grades and vertical curves.
   - (B) Curb profiles where curbs are required.
   - (C) Super elevation transition diagrams for horizontal curves shall be shown if curbs are not required.
3) **Typical roadway cross-section showing:**
   - (A) Width and depth of base.
   - (B) Width and depth of paving.
   - (C) Curbs if required.
   - (D) Side slopes.
   - (E) Ditch section in cut areas.
4) Detail plans of all bridges, stamped by a registered professional engineer.
5) Detail plans of any drainage and irrigation structures, sewer lines, or other structures.
6) Any other information required by the County Public Works Department.

Section 3.9830. Public and County Road Standards (Ord. 21-05)

1) **Road Design:**
   - (A) The radius of curvature, grade and intersection curb return radius of streets shall conform to the minimum standards prescribed in Tables 3.2, 3.3, and 3.4 of these standards.
   - (B) Alignment of streets: Streets located on opposite sides of an intersecting street shall have their centerlines directly opposite each other where

possible; otherwise, the centerlines shall be separated by not less than 125 feet.

(C) Intersection angles: Street intersections shall be as near right angles as possible except where topography requires a lesser angle, but in no case shall the acute angle be less than 60 degrees.

(D) Location of centerline: The centerline of the paving shall correspond to the centerline of the right-of-way where possible and practical.

(E) Continuation of streets: Subdivision streets which constitute the continuation of streets in contiguous territory shall be aligned so that their centerlines coincide. Where straight-line continuations are not possible, such centerlines shall be continued by curves. New streets or the continuation of a street in contiguous territory may be required by the Planning Commission where such continuation is necessary to maintain the function of the street or a desirable existing or planned pattern of streets and blocks in the surrounding area. Any road or street which does not connect directly to a County maintained road, City maintained street or state highway will not be accepted for maintenance by the County.

(F) Streets in Subdivision Adjoining Unsubdivided Land:

1. Stubbed streets: Where a subdivision adjoins unsubdivided land, streets which may be necessary to assure the proper subdivision of the adjoining land or the continuation of the function of a major arterial or collector street shall be provided through to the boundary line of the subdivision.
2. Half streets: Half streets proposed adjacent and parallel to the boundary line of the subdivision, while generally not acceptable, may be approved where essential to the reasonable development of the subdivision when in conformity with other requirements of this ordinance and when the Planning Commission finds it will be practical to require the dedication and improvement of the other half when the adjoining property is subdivided. Half streets shall not be permitted where lots would front on such streets. Where half streets are provided, a performance bond may be required to insure all improvements until such time as the remaining half street on adjacent property is dedicated and improved. Whenever an existing half street is adjacent and parallel to the boundary line of a proposed subdivision, the subdivider shall dedicate and improve such additional right-of-way as may be necessary to meet the standards for the type of streets involved.

(G) Subdivision roads: All roads not to be maintained by the County shall be posted with an approved sign stating roads are not County maintained.

(H) Existing streets: Whenever existing streets adjacent to or within a tract are of inadequate width, additional right-of-way shall be provided at the time of the subdivision. When existing streets are to be used as access to the subdivision they shall be constructed as to provide reasonable access as determined by the County Public Works Director or County Engineer.

(I) Cross Sections and Tables. All new arterials, collectors, and local streets must conform with design standards of Table 3.2 Road Right-of-Way and Improvement Standards.

2) **Improvement Plans:** A complete set of Improvement Plans shall be submitted and approved by the Public Works Director County Engineer, or designee prior to the start of construction on any County maintained road, public way or subdivision road which is to become a public way.

3) **Surveying:** All roads shall be located by a survey crew so as to ensure that the road is constructed in the location shown on the improvement plans. The construction of the road improvement shall be within 0.3' more or less of the horizontal and vertical location shown on the improvement plans.

4) **Monumentation:** Center line P.C. and P.T. points on horizontal curves shall be referenced with permanent monuments in accordance with the County Surveyor's requirements.

5) **Standard Specifications:** All roadway excavation, fill construction, subgrade preparation, aggregate bases, surfacing, prime coats and paving will be built in accordance with the current edition of the Oregon Department of Transportation " Oregon Standard Specifications for Construction". Whenever these specifications refer to the State, consider that to mean the County of Clatsop, the appropriate County Department or appropriate County address. In case of discrepancy or conflict in the plans, standard specifications, supplemental standard specifications and special provisions, they shall govern in the following order:

A. Special Provisions
B. Plans specifically applicable to the project.
C. Standard or general plans.
D. Supplemental Standard Specifications.
E. Standard Specifications.

6) **Testing:** All testing except as herein noted, will conform to methods described in "A.A.S.H.T.O. Materials, Part 11, Tests", current Edition. All lab costs for testing will be borne by the developer.

7) **Inspection:** The County Public Works Department shall be notified 48 hours in advance of the time for subgrade inspection, 48 hours in advance of the time for base inspection and 48 hours in advance of the time for paving inspection. The subgrade is to be inspected before placing the base. The base is to be inspected before placing the pavement. If proper notification for inspection has not been given, the Clatsop County Public Works Department will not grant approval of the road for twelve months. In this way, the County can observe any deficiencies that may develop in the road and have them corrected before acceptance.

8) **Subgrade:** All subgrades will be compacted in accordance with the Standard

Specifications.

9) **Aggregate Base:** Aggregates for aggregate base shall be gravel or rock, crushed or uncrushed, including sand, reasonably well graded from coarse to fine. The grading shall be in accordance with Table 02630-1 of the most current edition of the Oregon Department of Transportation Oregon Standard Specifications for Construction.

10) **Asphalt Prime Coat:** For all roadway sections using an oil mat, an asphalt prime coat will be applied to the aggregate base in addition to the oil mat. The prime coat will be applied in accordance with Section 705 of the Standard Specifications. Application rate and type of oil will be as approved by the County Engineer. The aggregate shall be ¾ to ½ or as approved by the Public Works Director, County Engineer or designee and specified in Section 705.10 of the Standard Specifications. The aggregate shall be applied within the range of 0.004 to 0.013 cubic yards/square yard. A three-day curing period will be required.

11) **Asphalt Penetration Macadam:** Where any oil mat is required it shall be applied in accordance with the Standard Specifications. The bituminous material used in the first two spreads shall be as approved by the County Public Works Director. The bituminous material used in the seal coat may be as approved by the Public Works Director.

12) **Asphalt Concrete Pavement:** Where asphalt concrete pavement is required it shall be done in accordance with the Standard Specifications. The asphalt cement shall be as approved by the Public Works Director, County Engineer or designee. The class of asphalt concrete shall be Level 2. Density testing shall be supplied for all asphalt concrete pavement.

13) Where required Portland cement concrete curbs and sidewalks shall be constructed in accordance with Oregon Department of Transportation Standard Drawings and the Standard Specifications. The concrete shall be as specified in the Standard Specifications.

14) **Select Backfill:** The curbs shall be backfilled in the areas shown on the plans with select backfill. This select backfill shall consist of materials with a maximum size of three inches. The material shall be compacted to at least 90 percent of its relative maximum density.

15) **Clearing:** The right-of-way shall be cleared of all trees. However, in subdivisions where traffic safety would not be involved and a lesser requirement would not create a hazard, the right-of-way shall be cleared a minimum of forty-feet (40) or four-feet (4) beyond the edge of shoulder or curb line or the finished road. Also, in subdivision, the case of an individual tree which is considered an exceptional or stately tree, an allowance can be made to leave the tree within the above mentioned four (4) foot area. In some instances, consideration can also be given to allow the prism of the road to shift slightly toward one side of the right-of-way. Any change in the alignment should be done to provide a safe and aesthetic looking roadway.

16) **Signs:** Clatsop County has jurisdiction concerning the location of all signs on County maintained roads and public ways.

When in the Public Works Director's opinion there may be a need for a change in the speed limit for a road, he shall request the Oregon State Speed Control Board to study the road in question. If the Speed Control Board issues an order to post a speed limit on the road, Clatsop County will furnish and install the speed limit signs at the County's expense.

Name signs for County maintained roads shall have reflective green background with reflective white letters.

Signing at intersections will be paid for as follows:

(A) Intersection of two County maintained roads:
  1. Stop signs - County
  2. Name signs - County

(B) Intersection of a County maintained road and a public way:
  1. Stop signs - County
  2. Name signs - County

(C) Intersection of two public ways:
  1. Stop signs - Others
  2. Name signs - Others

(D) Intersection of two private ways:
  1. Stop signs - Others
  2. Name signs - Others

(E) Intersection of private way and public way:
  1. Stop signs - Others
  2. Name signs - Others

Clatsop County Road Department may furnish and install the signs which are referred to above as paid for by "others". However, they shall be paid by "others" for the County's expense.

17) **Drainage:**

(A) **Size of culverts:** The design and construction of all drainage facilities within a project shall be of sufficient size and quality to receive and transport, at a 25 year storm frequency of all surface drainage and natural drainage course waters coming to and passing through the project from the watershed or watersheds to which it is servient, when the lands located in such are at full planned development, according to the Comprehensive Framework Plan. The minimum diameter pipe to be used shall be 12 inches.

Prior to approval being granted for a project, it must be shown that the existing downstream facilities are adequate to receive and pass storm water runoff discharged through and from the proposed project from a 25 year storm based on the present development plus any proposed developments of the lands of the watershed or watersheds to which the proposed project is servient.

In those areas located in the 100-year floodplain, the design and construction of all drainage facilities shall be of sufficient size and quality to receive and transport the 100- year storm without raising the floodplain elevation. The drainage facilities may be designed to pass less than a 100-year storm provided retention or detention of the runoff is designed and that such retention or detention does not raise the floodplain upstream.

(B) **Drainage easements:** When, due to topographical or other reason, all or any portion of the water collected in the project must be discharged at the boundary of the project, such that it is concentrated and must run across other private property before reaching a natural or existing drainage course, the developer shall make all necessary arrangements with the affected property owner or owners. Arrangements shall include, but are not limited to, a proper easement for drainage in favor of the public executed by the affected owner or owners and a method of transporting the water, i.e. ditch, sewer, etc., satisfactory to the County and said owner or owners.

If it is necessary to carry water across portions of the land being developed hereunder, which are not to become public, and a satisfactory easement has not been provided in the official plat of the area, the developer shall prepare and cause to be executed a proper easement to the public for such purpose.

(C) **Connections to roadside ditches:** Where drainage is to be connected to an existing roadside ditch, the ditch shall not be deepened so as to produce a finished ditch more than two (2) feet below the maximum of two (2) foot depth, the developer shall cause to be constructed a proper size storm sewer line in said roadside ditch.

18) The County shall require that a maintenance agreement be recorded in the records of Clatsop County along with any map or plat creating a public road, and include the following terms:

(A) That the agreement for maintenance shall be enforceable by a majority of persons served by the road.

(B) That the owners of land served by the road, their successors, or assigns, shall maintain the road, either equally or in accordance with a specific formula.

(C) All public road maintenance agreements shall be reviewed and approved by Public Works prior to recording. (Ord. 21-05)

Section 3.9840. Private Road Minimum Requirements (Ord. 21-05)
Table 3.4 and the following minimum requirements shall apply for any action relating to the approval of a private road:

1) Private roads shall provide access to no more than ten (10) abutting lots or parcels. A private road may serve more than ten (10) lots or parcels when the parcels are within a planned development or subdivision and when such road is constructed to the standards for a public road, and is approved as a part of the planned development or subdivision. Under no circumstances shall a private road serve other roads or areas.

   Surf Pines, The Highlands at Gearhart, and Castle Rock Estates are exempt from this requirement. These three areas are served by private roads and already exceed the 10-lot standard.
2) Private roads shall not be approved if the road is presently needed, or is likely to be needed, for development of adjacent property, or to be utilized for public road purposes in the normal development of the area, or if the private road is intended to serve commercial, or industrial district uses. Private roads shall not be approved for commercial or industrial land divisions.
3) The minimum easement for a private road shall be in accordance with Table 3.2 – Right-of-way Improvement Standards Table. The minimum right-of-way width shall accommodate required cut and fill slopes, ditches, turnouts and cul-de-sacs.
4) A lot or parcel abutting a railroad or limited access road right-of-way may require special consideration with respect to its access requirements.
5) Guardrail is required on all bridges and for a distance of 40 feet along the approaches to all bridges. Guardrail is also required along any fill slope or natural ground slope below the road that is steeper than 1:1, over 10 feet high, and is within 10 feet horizontally of the edge of the traveled road surface. The guardrail materials must be approved as conforming to Oregon State Highway Standard Specifications.
6) The County may require that the private road being considered be established as a dedicated way or County road and improved to the applicable standards, if it is determined by the County that the access and transportation needs of the public would be better served by such a change.

   The determination made by the County will include the following:
   (A) proximity of other roads being used for the same purpose,
   (B) topography of the parcel and contiguous parcels,
   (C) potential development as determined by the existing zoning or proposed zoning if the request involves a zone change,
   (D) safety factors such as visibility, frequency or road access points.
7) All private roads that are dead-end roads shall have a cul-de-sac or other suitable turnaround as determined by the local fire chief or State fire marshal.

8) A private road shall directly connect only to a public, county or state road.
9) The travel surface of the private road shall be constructed so as to ensure egress and ingress for the parcels served during normal climatic conditions:
   (A) Twelve (12) inches of pit run base course or equivalent. The grade of rock shall be approved by the County Road Department prior to construction. As an alternate, the depth of the base course containing 4 or 6-inch minus or jaw run may be less than 12 inches as determined on a case-by-case basis by the County Road Department.
   (B) Four inches of 3/4-inch minus top course.
10) The County shall require that a maintenance agreement be recorded in the records of Clatsop County along with any map or plat creating a private road, and include the following terms:
   (A) That the agreement for maintenance shall be enforceable by a majority of persons served by the road.
   (B) That the owners of land served by the road, their successors, or assigns, shall maintain the road, either equally or in accordance with a specific formula.
11) The County shall require that an easement over the private road for ingress and egress, including the right of maintenance, be conveyed to the properties served by the road.

Section 3.9850. Minimum Construction Standards for Private Roads (Ord. 21-05)

1) Fourteen (14) foot wide improved travel surface (see G-14 (Figure 3.1) standard cross-section).
2) Turnouts shall be required at 800 feet maximum spacing, or at distances which ensure continuous visual contact between turnouts, and constructed to the following dimensional standards: 50 feet in length and seven (7) feet in width, with 25 foot tapers on each end back from its point of connection with the County or public road.
3) Cut and fill slope requirements, and ditch lines as detailed on the G-14 standard cross section. The grade of the ditch slopes parallel to centerline shall be no less than 1% to provide for adequate drainage. The developer shall be required to provide all erosion control measures necessary to maintain the standard cross section and to eliminate any increase in any stream turbidity.
4) The width of the road approach at its intersection with the County road, or other public road, shall equal 18 feet, and taper over a distance of 50 feet to the travel surface width back from its point of connection with the County or public road.
5) The finished grade of the roadway shall not exceed 16 percent. Any finished grade in excess of 12% shall be asphalt or concrete.
6) A suitable turnaround acceptable to the fire chief or State fire marshal shall be provided at the terminus of the private road or within 150 feet of its terminus.
7) All culverts, bridges and other waterway crossings serving two (2) or more parcels shall be constructed and maintained to carry American Association of State Highway and Transportation Officials (AASHTO) HS-20 loading. a typical

acceptable type is 16 gauge, galvanized CMP for small cross drains and drainageway crossings. Twelve inch diameter culverts are the absolute minimum. Bridges and other large waterway crossings shall be certified by a professional registered engineer.

8) All private road points of access to public roads shall include a landing area to extend 20 feet minimum beyond the shoulder of the public road on which the profile grade shall not exceed +/- three (3) percent. A greater landing area may be required to allow for future road improvements.

9) Surveying: All roads shall be located by a surveyor so as to ensure that the road is constructed in the location shown on the improvement plans. The construction of the road improvement shall be within 0.3' more or less of the horizontal and vertical location shown on the improvement plans.

10) Inspection by the County is required for all private road improvements. The County Public Works Department shall be notified 48 hours in advance of the time for subgrade inspection, 48 hours in advance of the time for base inspection and 48 hours in advance of the time for paving inspection. The subgrade is to be inspected before placing the base. The base is to be inspected before placing the pavement.

Section 3.9860. Roadway Construction in Serial Partitions (Ord. 21-05)

(1) This section applies to properties being developed through the use of sequential or serial partitions rather than through a typical subdivision process.

(2) When developing parcels through a partition process the minimum road standard for the partition shall be based on Table 3.2 – Right-of-way and Improvement Standards Table for the number of proposed parcels including any potential parcels from planned or unplanned future divisions. It shall also include any other properties utilizing the roadway.

(3) If the intent of the development is to not develop future parcels the applicant may record a development restriction on any large parcels restricting their future division. The applicant may then construct the roadway as applicable taking into account that those parcels may not be divided in the future.

(4) Alternatively, an applicant may record a temporary development restriction on the larger parcel(s) with the condition that the full right of way or easement width shall be reserved on the initial partition. Any required future road improvements shall be completed prior to the sale of those parcel(s) or the recording of any future partition(s).

(5) All other roadway requirements shall be adhered to.

Table 3.2 - Right-of-Way and Improvement Standards Table

Functional Road Class	A.D.T	Design Standard Typical	Travel Width	R-O-W Width(7)	Surface Type	Design Speed MPH	Max. % Grade	Min. Curve Radius	Street Signs
County Road Standards									
Resource Route	300-1000	A-38	38	48-54	A.C..(6)/Oil	40	12	500	(1)
Arterial	>1000	A –38	38	80	A.C.(6)	45	12	750	(1)
Major Collector	300 – 1000	A –28	28***	60	A.C.(6)	40	12	500	(1)
Minor Collector		A-28	28***	60	A.C.(6)	40	12	500	(1)
Local	60 – 300	A –20	20	50	A.C.(6)/Oil	35	12	350	(1)
Public and Private Road Standards									
Land Division (10+ lots)	>60	A –20	20	50	A.C.(5)	25	12	250	(1)
Land Division (7-9 lots)	30 – 60	A - 20	20	50	A.C.(5)	20	12**	150	(1)
Partition Land Division (4-6 lots/parcels***)	<60	G - 20	20	50	Gravel	20	12**	150	(1)
Land Division (1-3 lots)	<30	G – 14(4)	14	25	Gravel	15	14*	50	(1)

* If unavoidable conditions exist a grade of 2% greater than that shown may be allowed with A.C. paving or concrete.

** If unavoidable conditions exist a grade of 4% greater than that shown may be allowed with A.C. paving or concrete.

*** May be reduced to 24 feet as specified in AASHTO if approved by the County Engineer.

(1) One (1) approved street sign will be provided at each intersection for each named street.

(2) All dead-end streets will be terminated with a 50' radius cul-de-sac or other approved turnaround acceptable to the fire chief or State fire marshal.

(3) Drainage/slope easements may be required if roadway slopes extend beyond the right-of-way.

(4) G-14 roads require turn-outs at a maximum distance of 400 feet, or at a lesser interval that will maintain a continuous visual contact between each successive turn-out.

(5) Minimum A.C. thickness is 3" nominally compacted ODOT ½" Level 2, or approved equal. Any roadway intended to be brought in to the County Road system will require 4" of AC.

(6)	Minimum AC thickness is 4” nominally compacted ODOT ½” Level 2, or approved equal.
(7)	Easement width in the case of a private road.

This space deliberately left blank.

Figure 3.1

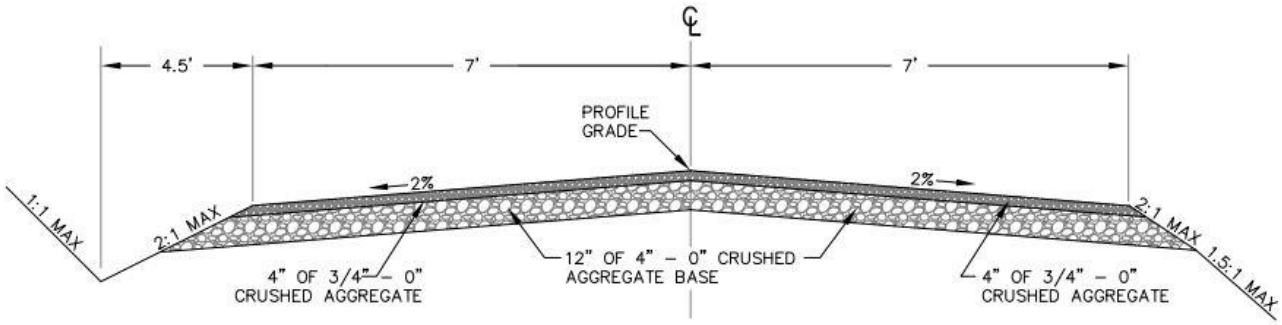

NOTES:

1. CONSTRUCTION OUTSIDE ROW LINE SHALL REQUIRE SLOPE EASEMENT.
2. SUB–BASE AND BASE COMPACTED TO 95% MAXIMUM DENSITY.
3. HORIZONTAL AND VERTICAL ALIGNMENT TO MEET AASHTO STANDARDS FOR A DESIGN SPEED OF 15 MPH.
4. MAXIMUM GRADE 16% (18% MAY BE ALLOWED WITH ASPHALT PAVING).

CLATSOP COUNTY ROAD DEPARTMENT		
DESIGN STANDARD CLASS G–14		
DATE: 3/2021	NOT TO SCALE	DRAWN BY M.J.S./T.L.H.

This space deliberately left blank.

Figure 3.2

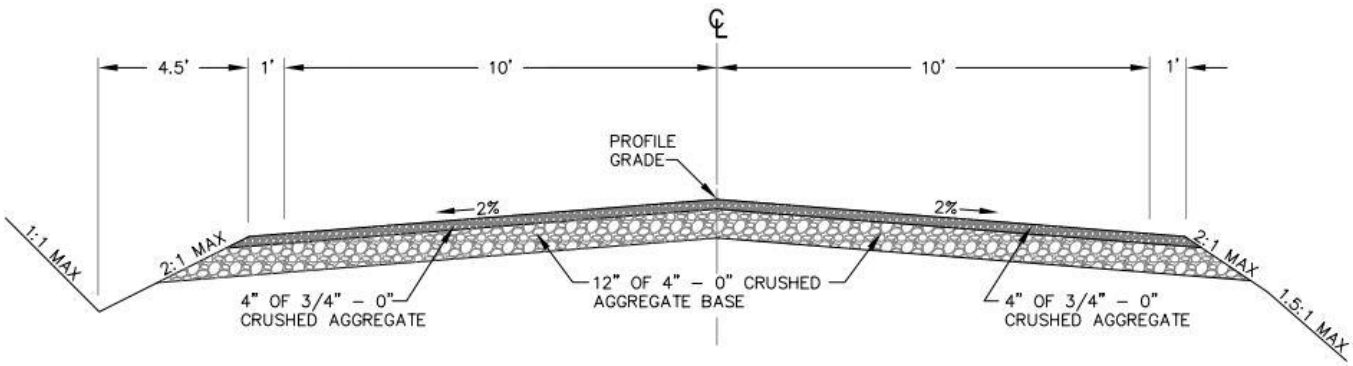

NOTES:

1. CONSTRUCTION OUTSIDE ROW LINE SHALL REQUIRE SLOPE EASEMENT.
2. SUB–BASE AND BASE COMPACTED TO 95% MAXIMUM DENSITY.
3. HORIZONTAL AND VERTICAL ALIGNMENT TO MEET AASHTO STANDARDS FOR A DESIGN SPEED OF 20 MPH.
4. MAXIMUM GRADE 12% (16% MAY BE ALLOWED WITH ASPHALT PAVING).
5. MINIMUM 1' GRAVEL SHOULDERS REQUIRED.

CLATSOP COUNTY ROAD DEPARTMENT		
DESIGN STANDARD CLASS G–20		
DATE: 3/2021	NOT TO SCALE	DRAWN BY M.J.S./T.L.H.

This space deliberately left blank.

Figure 3.3

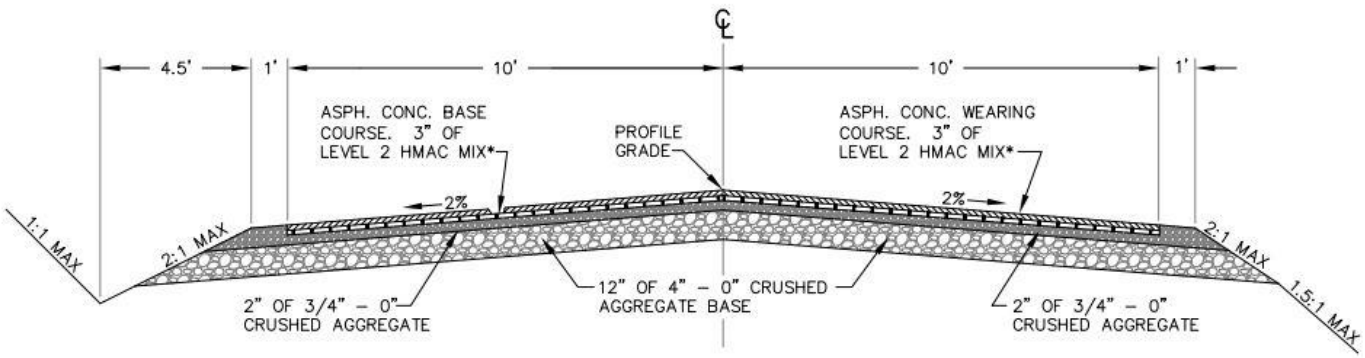

NOTES:

1. CONSTRUCTION OUTSIDE ROW LINE SHALL REQUIRE SLOPE EASEMENT.
2. SUB–BASE AND BASE COMPACTED TO 95% MAXIMUM DENSITY.
3. HORIZONTAL AND VERTICAL ALIGNMENT TO MEET AASHTO STANDARDS FOR A DESIGN SPEED OF 25 MPH.
4. MAXIMUM GRADE 12% (16% MAY BE ALLOWED WITH ASPHALT PAVING).
5. CENTERLINE STRIPE AS DIRECTED BY THE COUNTY ENGINEER.
6. OIL MATT MAY BE SUBSTITUTED FOR REQUIRED AC ON A COUNTY ROAD.

* 4" OF AC REQUIRED FOR COUNTY ROADS.

CLATSOP COUNTY ROAD DEPARTMENT		
DESIGN STANDARD CLASS A–20		
DATE: 3/2021	NOT TO SCALE	DRAWN BY M.J.S./T.L.H.

This space deliberately left blank.

Figure 3.4

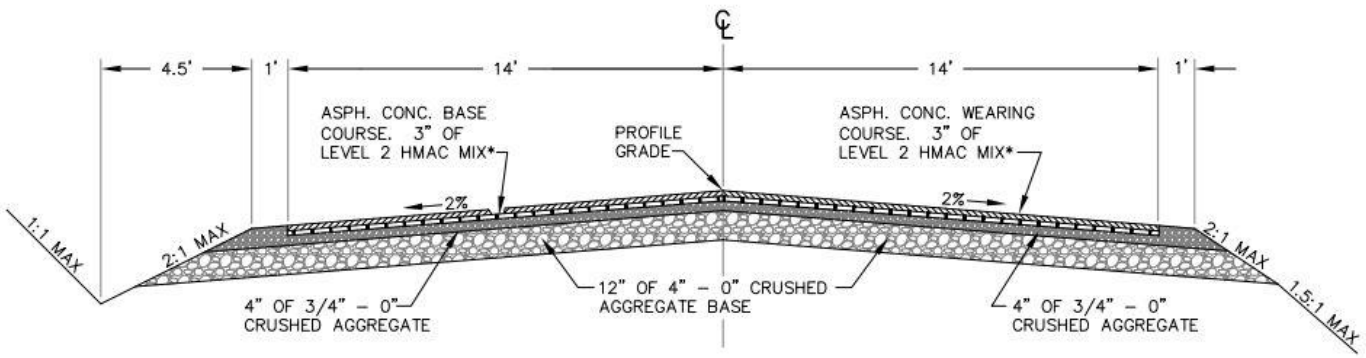

NOTES:

1. CONSTRUCTION OUTSIDE ROW LINE SHALL REQUIRE SLOPE EASEMENT.
2. SUB–BASE AND BASE COMPACTED TO 95% MAXIMUM DENSITY.
3. HORIZONTAL AND VERTICAL ALIGNMENT TO MEET AASHTO STANDARDS FOR A DESIGN SPEED OF 40 MPH.
4. MAXIMUM GRADE 12%.
5. STRIPE FOG LINE (INSIDE EDGE), AT 13' FROM CENTERLINE.
6. CENTERLINE STRIPE REQUIRED.

* 4" OF AC REQUIRED FOR COUNTY ROADS.

CLATSOP COUNTY ROAD DEPARTMENT		
DESIGN STANDARD CLASS A–28		
DATE: 3/2021	NOT TO SCALE	DRAWN BY M.J.S./T.L.H.

This space deliberately left blank.

Figure 3.5

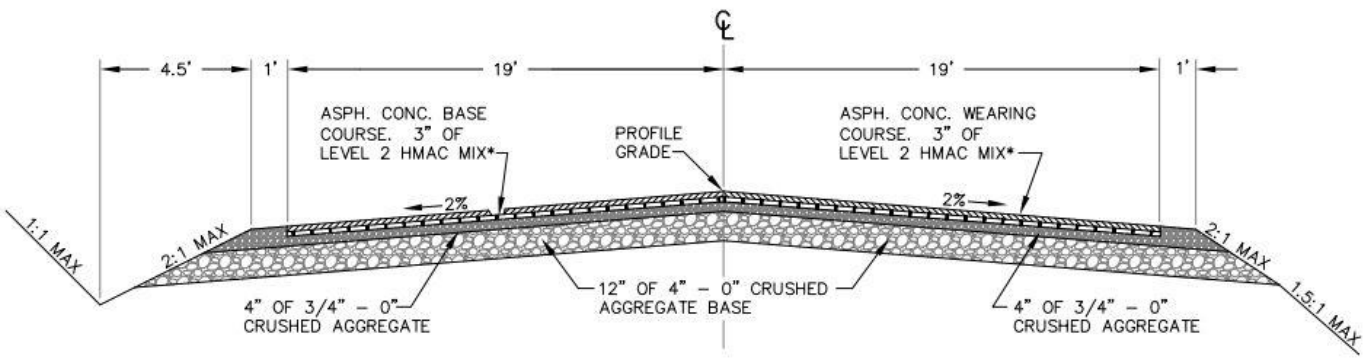

NOTES:

1. CONSTRUCTION OUTSIDE ROW LINE SHALL REQUIRE SLOPE EASEMENT.
2. SUB–BASE AND BASE COMPACTED TO 95% MAXIMUM DENSITY.
3. HORIZONTAL AND VERTICAL ALIGNMENT TO MEET AASHTO STANDARDS FOR A DESIGN SPEED OF 45 MPH.
4. MAXIMUM GRADE 12%.
5. STRIPE FOG LINE (INSIDE EDGE), AT 14' FROM CENTERLINE.
6. CENTERLINE STRIPE REQUIRED.
7. OIL MATT MAY BE SUBSTITUTED FOR REQUIRED AC.

* 4" OF AC REQUIRED FOR COUNTY ROADS.

CLATSOP COUNTY ROAD DEPARTMENT		
DESIGN STANDARD CLASS A–38		
DATE: 3/2021	NOT TO SCALE	DRAWN BY M.J.S./T.L.H.

This space deliberately left blank.

Table 3.3 - Road Improvement Policy Matrix			
	Resources Zones	**Non-Resource Zones**	
	New Road Created or Existing Road	New Road Created	Existing Road Used
1. Must a road be improved in conjunction with a partition?			
A. Private Road	No	Yes	Yes (1)
B. Public Road	No	Yes	No
C. County Road	Yes (2)	Yes	No
2. Minimum Road Standard Required?			
A. Private Road	n/a	G-14	G-14 (1)
B. Public Road	n/a	G-20	G-20
C. County Road	(2)	A-20(3)	A-20

(1) If an existing private road provides access to a parcel, this road must be improved to at least an G-14 standard. See Table 3.2 Right-of-way and Improvement Standards.
(2) If a County road is created or utilized in a resource zone to provide access to a partitioned parcel, the Board of Commissioners shall establish minimum improvement standards and control the timing of the improvement.
(3) If a new portion of a County road is created to provide access to a non-resource zone partition, the Board of Commissioners shall set the improvement standards (the minimum improvement shall be an A-20 standard).

Table 3.4- Minimum Road Standards for Private Roads							
Revision Class	Maximum # of Parcels to be Served	Maximum Grade	Travel Width	Recommended Easement Width	Design Speed	Top Course	Base Course
A(4)	Private Roads are not allowed within Class "A" Division except as noted						
B	10	16% (3)	1(2) See Table 3.2	See Table 3.2	--	--	--
C	10	16% (3)	1(2) See Table 3.2	See Table 3.2	--	--	--

(1) "A" - Within an Urban Growth Boundary or Rural Service Area Boundary.
"B" - Zoned for 5 acres or smaller, excluding Class "A" divisions.
"C" - Zoned for larger than 5 acres in size.

(2) Turnouts shall be provided intervisibly or at 800-foot intervals, whichever is less.

(3) Grades greater than 14% shall be asphalt or concrete.

(4) A private road is not permitted in an Urban Growth Boundary or Rural Service Area except that it may be permitted outside UGBs or RSAs.

Note: See Sections 3.9840 and 3.9850 for complete standards.